IMPERIAL II SOLAR LAMP

US Patent # 7172307

Instruction Manual

Models: GS-97N

Introduction

Thank you for your purchase. GAMA SONIC® solar charged lighting eliminates the problems associated with most solar lighting available today. GAMA SONIC® solar charged lights are brighter and last all night with a full day solar charge. Unique design, superior light output and numerous installation options confirm the outstanding value of our product.

GAMA SONIC® has been recognized as a worldwide leader in the lighting industry for over 20 years. The company also offers unique multi-purpose rechargeable products that range from party lights to emergency lighting products.
For technical assistance and more information call our Toll Free number:
800-835-4113 (only within the US)

Visit our website or download the latest version of your instruction manual: www.gamasonic.com Or www.gamasonic.com/user-guides

Please read the instruction manual carefully to obtain the best results from your purchase.

Solar Lamp Post Location

For optimum light duration throughout the night, it is very important to mount your solar lamp post in a spot where it will receive the maximum amount of sunlight throughout the day.

NOTE: For best results, the solar lamp must be charged for two sunny days in the "ON" position.

Operation Instructions

1. Detach the upper part of the lamp as shown in **Fig. 1** and **Fig. 2** by turning it counterclockwise.
2. Turn "ON" the operation switch (see **Fig. 3**.) by choosing your desired brightness level:
   "Low" - lasts longer using dimmer light.
   "**High"** - Brighter light output.
3. Reassemble the upper part of the lamp by placing it on top of the 4 hinges, and then turn it clockwise.
4. Install the lamp onto your existing 3" post, using the screws provided.

   NOTE: If you are replacing an existing gas/electric post light, you must consult a certified technician to cancel them before installation.

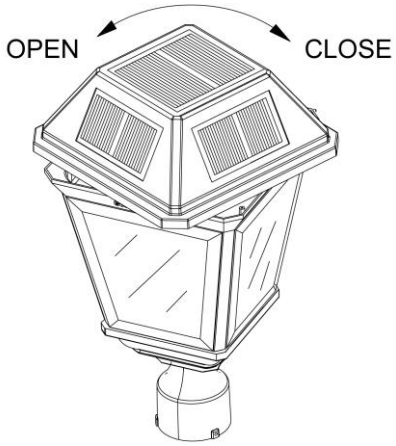

Fig. 1

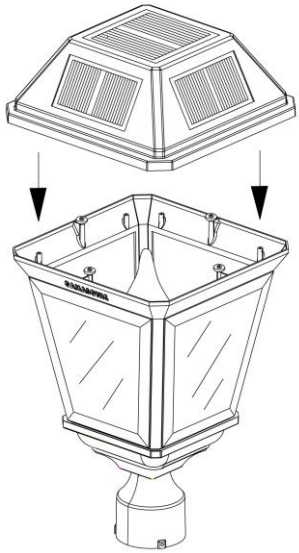

Fig. 2

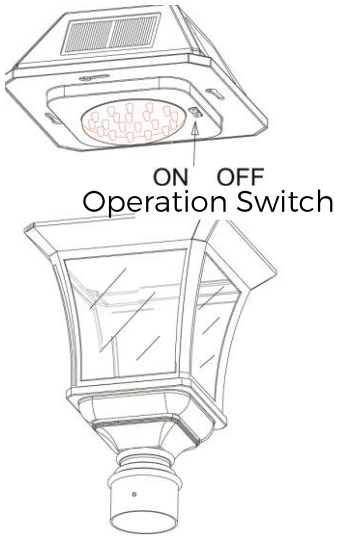

Fig. 3

Assembly Instructions

GS-97NF

Place Lamp Part (A) on top of your existing 3" post and tighten the 3 screws provided to secure the lamp.

GS-97NF2\GS-9NF3:

1. Screw Arm part (B) onto part (C). There are 2 screw holes per arm; one is on the inside bottom and one is on the outside top.
2. Repeat step 1 twice for the **GS-97NF2** and 3 times for **GS-97NF3**.
3. Once step 2 is complete insert Part (D) into Part (C) and secure with provided screws Part (H).
4. Place Part (C) on top of Pole and tighten the screws Part (H).
5. Place lamp Part (A) onto the arm and secure with the screws Part (F). Repeat twice in model **GS-97NF2** and 3 times in model **GS-97NF3**.
6. Place the lights on top of existing 3" post and secure the Part (C) with screws provided.

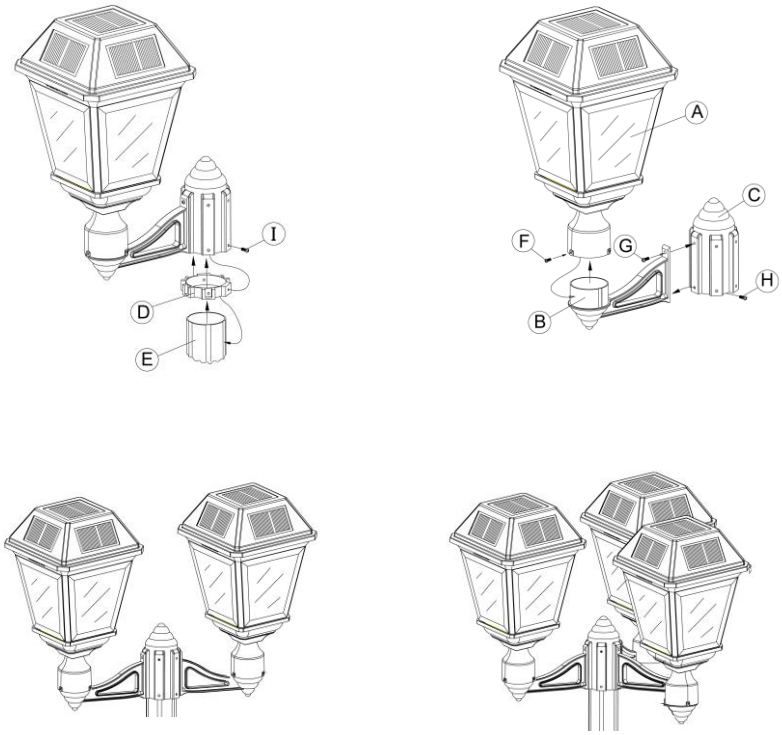

GS-97NW

NOTE: locate your solar lamp facing the south for best results.
Use electric drill to make two holes in the wall, place provided screw anchors into the holes, place the wall bracket (N) in line with the holes and screw on with the provided screws.
Place Lamp (A) onto bracket and secure with the 3 screws provided.

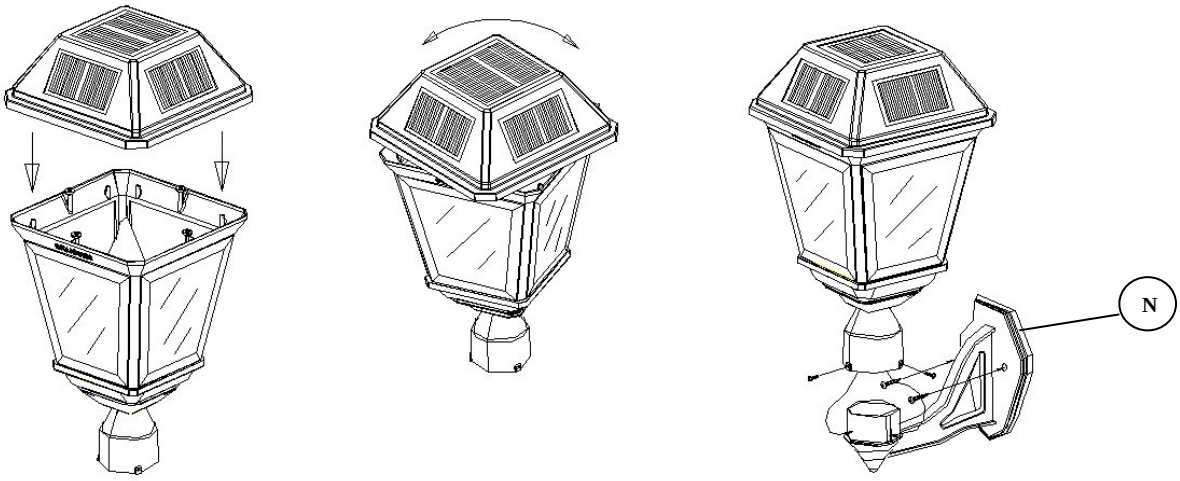

Adding/Replacing the Batteries

As of January 2017, ALL Imperial II Solar Lamps have (4) Li-Ion Rechargeable Batteries Included/Pre-Installed (3.2V/3000mAh) (12A). Our Imperial II solar light duration will last 72 hours in the LOW setting and 36 hours in the HIGH setting once all batteries have been fully charged in the direct sun for +-3 days.

(After 2 ½ -3 years, the batteries will need to be replaced.)

1. Detach the upper part of the lamp as shown in **Fig. 1** by turning it counterclockwise.
2. Make sure the operation switch is in the OFF position.
3. Release the battery compartment screws located on the silver reflector and remove the old battery packs as shown in **Fig. 4**. Make sure new batteries are (3.2V/3000mAh) (12A) Li-Ion Rechargeable Gama Sonic Batteries.
4. Install the new batteries into the battery compartment.
5. Reassemble the unit by reversing the above procedure.

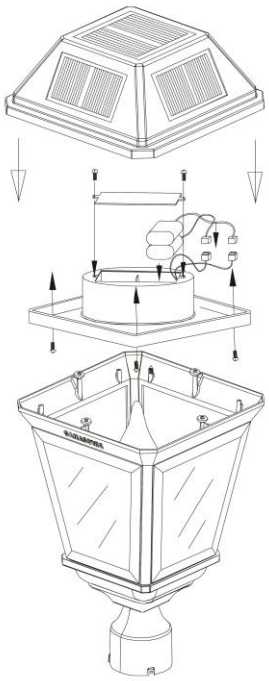

Fig. 4

Replacement batteries are available at www.gamasonic.com or via our Toll free number: +1-800-835-4113

WARNING: Do not dispose of Li-Ion batteries in the regular trash, municipal waste stream or by fire as batteries may leak or explode. Do not open, short circuit, or mutilate batteries as injury may occur. Preserve our environment by recycling Li-Ion batteries or disposing of them in accordance with local, State and federal regulations. Do not mix old and new batteries.

Maintenance

Clean the solar module regularly with a damp towel to guarantee optimum performance of the solar panel. Do not use any type of solvent for cleaning and be careful not to put too much pressure on the module while cleaning.

Trouble Shooting

If your solar charged light does not come on at dusk despite observance of all the instructions, please try the following steps:

1. Make sure that the solar light is not being affected by any other light source.
2. Ensure the solar light is not positioned in the shade during the day.
3. Make sure the switch in the lamp head is in the "ON" position.
4. Check that the batteries are installed correctly.

NOTE: The performance of the solar light will vary with the time of year. It will deliver more light when it has had a full day in the sun rather than a day in overcast weather.

WINTERTIME TIPS: Keep snow and debris cleaned off the solar panels so the batteries can recharge. If the lights are covered with snow for an extended period of time, after the snow melts, allow all the batteries to charge in full, direct sunlight for at least 6 hours to their maximum capacity.

WARNING: Please keep out of reach of children.