CN DISPLAYS

[concept·s]®

[MOVING MERCHANDISE DISPLAYS]

[SELECTIVE SYSTEMS]

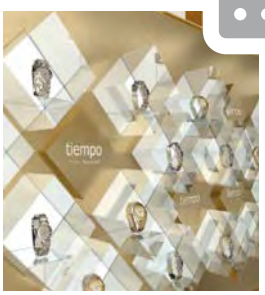

[VERTICAL SYSTEMS]

[HORIZONTAL SYSTEMS]

2016

[SHOP DESIGN SYSTEMS]

CHANGEABILITY

USEFUL

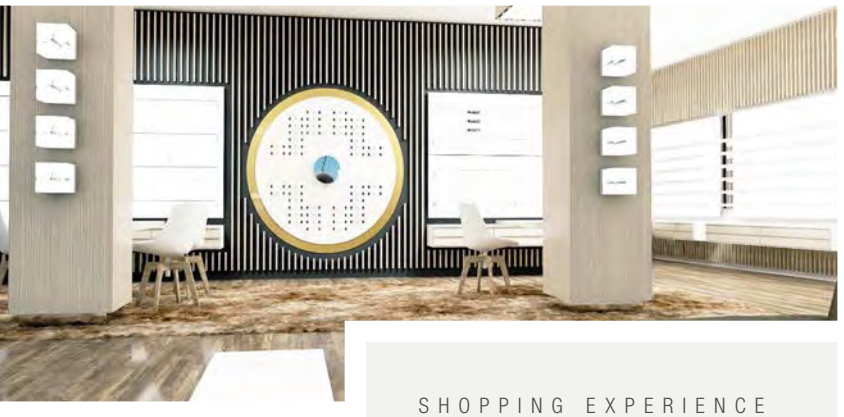

SHOPPING EXPERIENCE

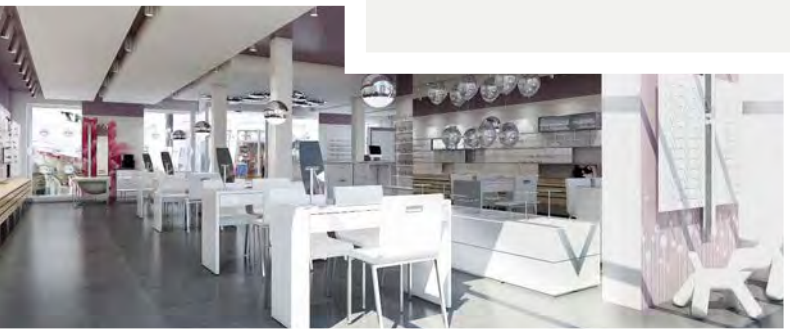

INFINITE
POSSIBILITIES

VARIETY OF SYSTEMS

SOPHISTICATED

[INDEX]

Page	Fields of application	OPTICS	HEARING CARE	WATCHES	JEWELLERY	FRAGRANCES + COSMETICS	SHOES	BAGS	LEATHER GOODS	ACCES-SORIES	BLISTER	CONSUMER ELECTRONICS	MOBILE PHONING	FASHION	SPORTS	HEALTH CARE/ PHARMACY
007	**Horizontal systems**															
008 - 017	LINEAR	●		●			●	●	●	●	●				●	●
018 - 027	LINEAR LED	●	●	●	●	●	●	●	●	●		●	●			
028 - 037	LINEAR STRIPE	●	●	●	●	●	●	●	●	●		●	●			●
038 - 047	PUR 2	●		●		●			●	●	●				●	
048 - 057	B-TWEEN	●		●	●	●			●	●			●			
058 - 068	SLIDE	●	●	●	●					●			●			
069	**Vertical systems**															
070 - 081	TUBIX CIRCO	●													●	
082 - 089	SCOPE SYSTEM	●	●	●	●	●	●		●			●	●			●
090 - 097	ARRAY SYSTEM	●	●	●	●	●	●			●						
098 - 108	VARIO [S] & VARIO [LS]	●								●	●				●	●
109	**Selective systems**															
110 - 119	LIGHT-BOX & LED CUBE	●	●	●	●	●			●	●			●			
120 - 131	MONO & PIN	●													●	
132 - 141	P.O.S. SYSTEM	●	●	●	●	●	●	●	●	●	●	●	●	●	●	●
142 - 152	VARIO [MP] & VARIO [LB]	●	●							●					●	●
153	**Moving merchandise displays**															
154 - 161	MOVE	●	●	●	●	●				●			●		●	
162 - 172	ELEVENDER	●		●	●	●							●		●	
173	**Service**															

LINEAR

Fields of application

- OPTICS
- WATCHES
- SHOES
- BAGS
- LEATHER GOODS
- ACCES-SORIES
- BLISTER
- SPORTS
- HEALTH CARE/ PHARMACY

LINEAR

LINEAR SYSTEM RAIL FOR MANYV ARIATIONS OF PRESENTING MERCHANDISE

DIVERSE PRODUCT CARRIERS ARE IN-SERTED WITH A PLASTIC ADAPTER INTO THE SYSTEM RAIL

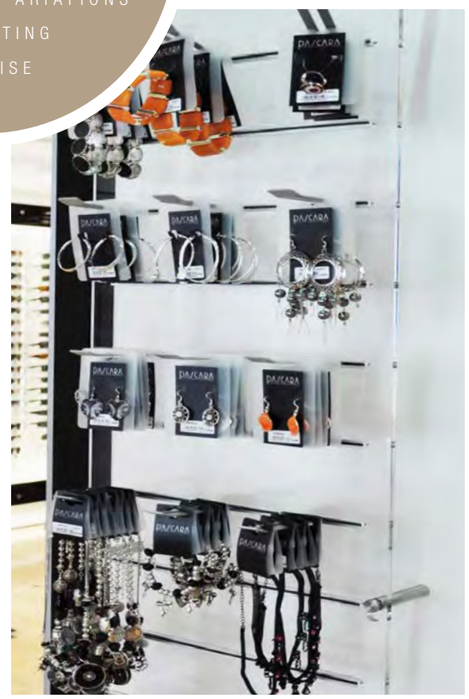

LINEAR

The basis of the LINEAR system is a simple speed frame, which is embedded horizontally into a wooden or acrylic glass panel. Along the profile, different kinds of fitting elements can be positioned flexibly on the display area. As you are used to other shop design systems by CNS Displays, your wall display can be redecorated quickly and effortless ly so that your merchandise display can be designed newly again and again.

Inserting the adapter into the rail

Moving the single spectacle display in the rail

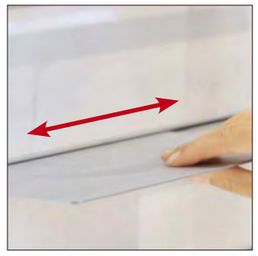

Moving the LINEAR shelf in the rail

■ LINEAR – easy fixation

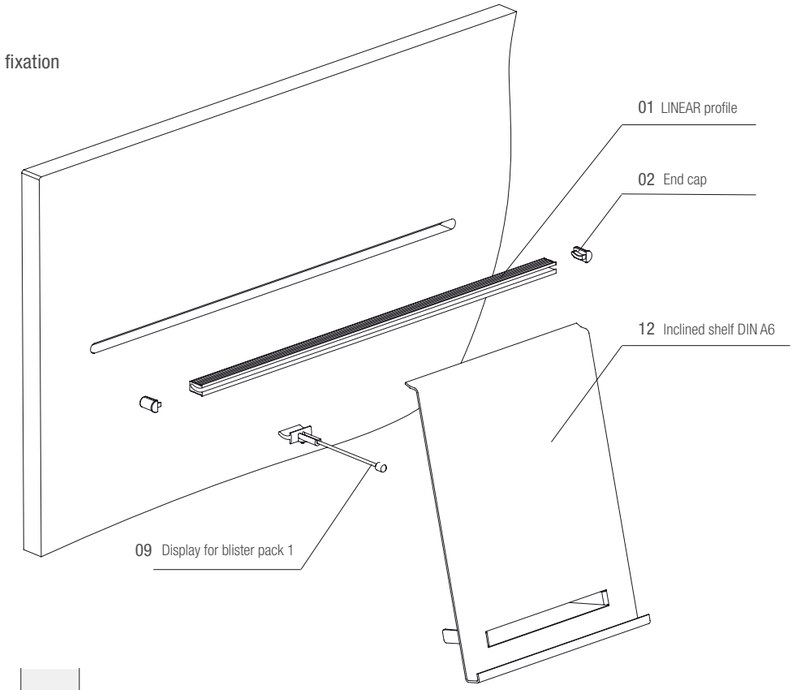

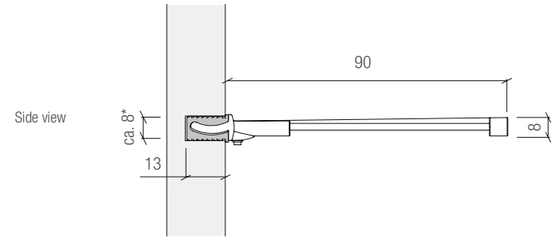

01. A

LINEAR rail in wooden panel

01. B

LINEAR rail in acrylic glass panel

Inserting the adapter into the rail

LINEAR

01
LINEAR profile, aluminium, cut by measure, sold by metre

max. 6000 x 9 x 14 mm

A.
for wooden panels L/13.01.10.06

B.
for acrylic glass panels L/13.01.11.06

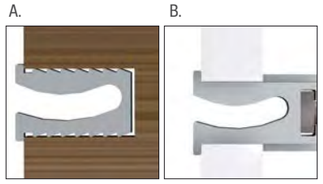

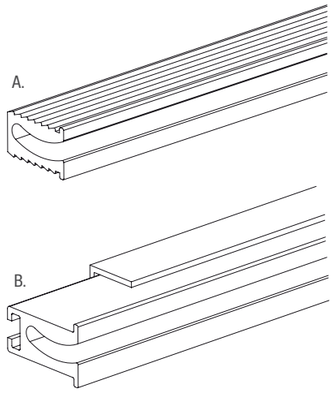

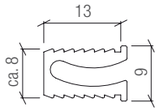

Side view

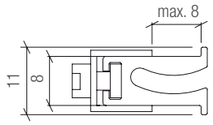

Side view

02
End cap for LINEAR profile

for wooden panels L/13.01.11.07

for acrylic glass panels L/13.01.11.08

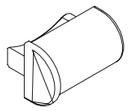

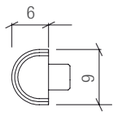

Front view

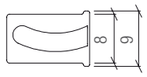

Side view

03
Mirror on metal plate

300 x 126 x 40 mm L/14.18.01.00

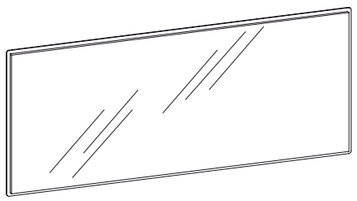

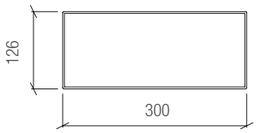

Front view

Side view

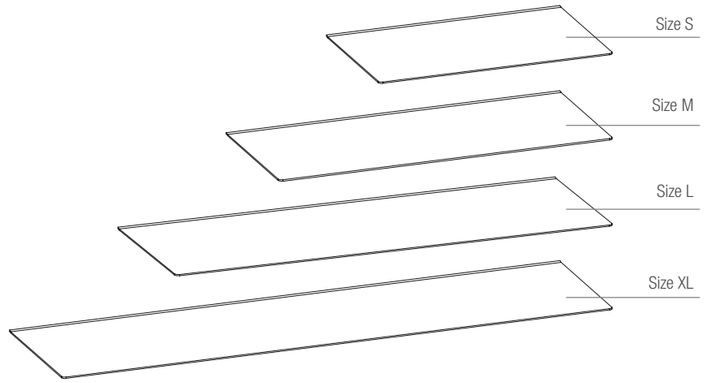

Front view

Side view

Front view

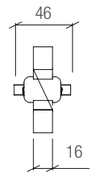

Side view

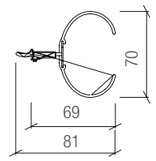

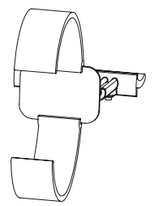

04
Metal shelf, aluminium, white powder-coated

Size S
350 x 2 x 200 mm L/14.18.40.00

Size M
500 x 2 x 200 mm L/14.18.50.00

Size L
600 x 2 x 200 mm L/14.18.60.00

Size XL
825 x 2 x 200 mm L/14.18.80.00

max. 0,5 kg

05
Watch display made of stainless steel, with LINEAR adapter, including plastic clip for watches

46 x 70 x 81 mm L/14.18.00.13

LINEAR

06
Single spectacle display, nickel-plated

180 x 75 x 182 mm L/14.09.00.02

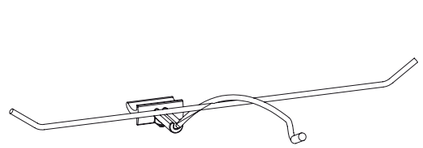

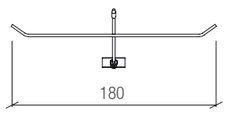

Front view

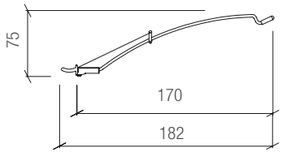

Side view

07
Spectacle case display, nickel-plated

83 x 36 x 132 mm L/19.11.30.02

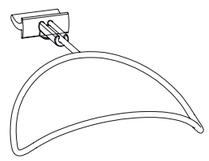

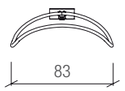

Front view

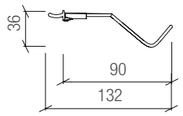

Side view

08

Spectacle case display, nickel-plated, for combination with single spectacle display

83 x 52 x 136 mm L/19.11.35.02

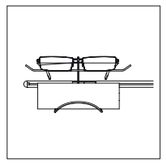

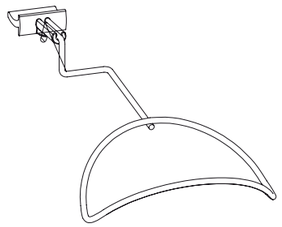

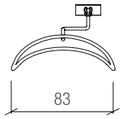

Front view

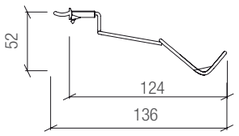

Side view

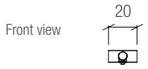

Front view

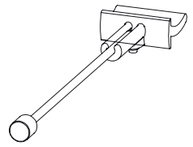

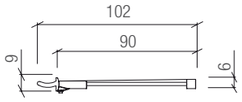

Side view

09
Display for blister pack 1, nickel-plated

20 x 9 x 102 mm L/14.18.00.01

max. 0,15 kg

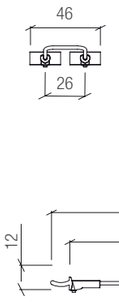

Front view

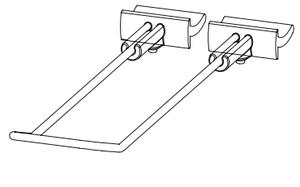

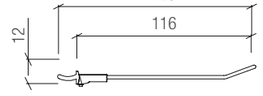

Side view

10
Display for blister pack 2, nickel-plated

46 x 12 x 128 mm L/14.18.00.12

max. 0,3 kg

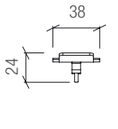

Front view

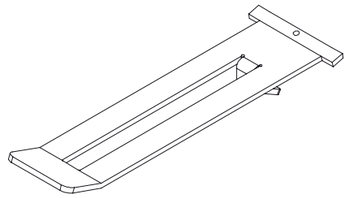

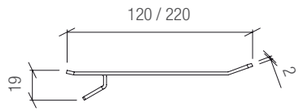

Side view

11
Display for blister pack 3, available in 2 lengths, steel silver powder-coated

38 x 24 x 120 mm L/14.18.00.03

max. 1,5 kg

38 x 24 x 220 mm L/14.18.00.04

max. 0,5 kg

LINEAR

12

Inclined shelf DIN A 6

120 x 170 x 37 mm L/14.18.05.00

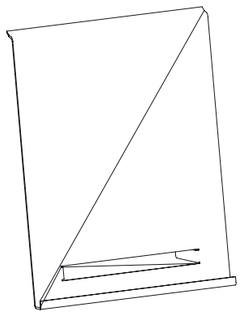

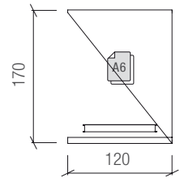

Front view

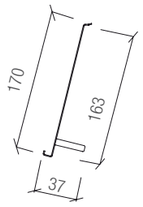

Side view

13

Signboard for exchangeable logos

150 x 70 x 48 mm L/14.18.01.03

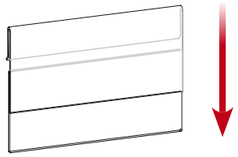

Front view

Side view

14

Decovase, test tube with support

Ø 15 mm

Höhe Height 150 mm L/14.18.03.01

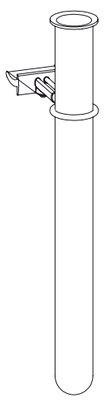

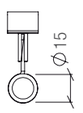

Top view

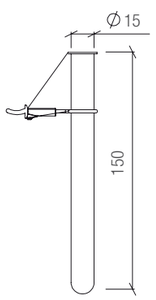

Side view

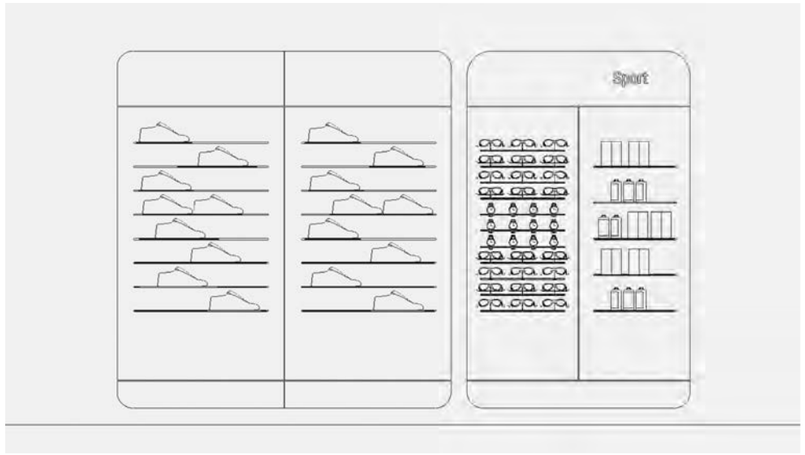

SHOES SPORTS

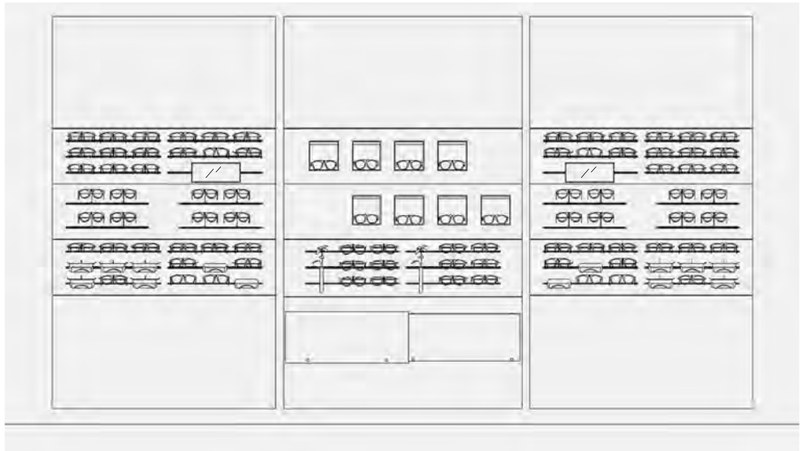

OPTICS

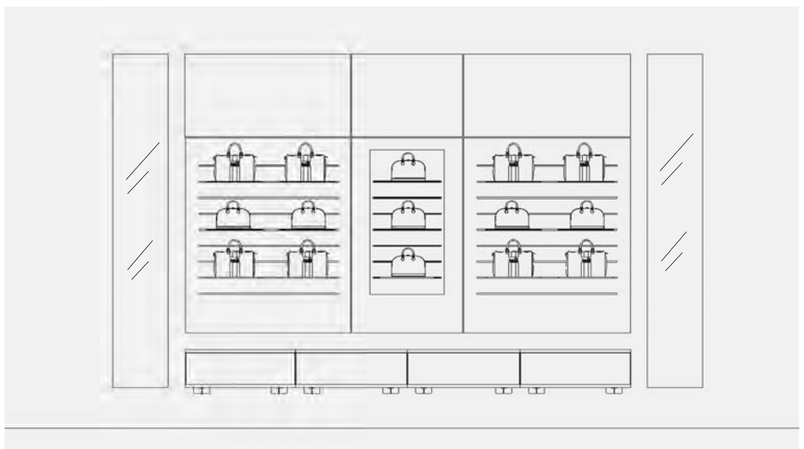

BAGS

Fields of application

- OPTICS
- WATCHES
- SHOES
- BAGS
- LEATHER GOODS
- ACCES-SORIES
- BLISTER
- SPORTS
- HEALTH CARE/ PHARMACY

LINEAR LED

Fields of application

- OPTICS
- HEARING CARE
- WATCHES
- JEWELLERY
- FRAGRANCES + COSMETICS
- SHOES
- BAGS
- LEATHER GOODS
- ACCES-SORIES
- CONSUMER ELECTRONICS
- MOBILE PHONING

LINEAR LED

A BUILT-IN LED
LIGHT AT THE BOTTO

FILIGREE DESIGN WITH
LOW STRUCTURAL HEIGHT

LINEAR LED

The LINEAR LED shelves have elegant design and low installation height with visible light at the front edge. They also have a built-in LED light at the bottom which also illuminates underlying objects perfectly and brings to bear. But lighting is not the only function the filigreed shelves offer: In the shelves invisible magnets are embedded, which allows the flexible and orderly positioning of matching product carriers and thus provides a clear presentation.

Bottom with integrated LED illumination

Magnetic product carriers available as accessories

■ LED shelves only 8 mm thick!

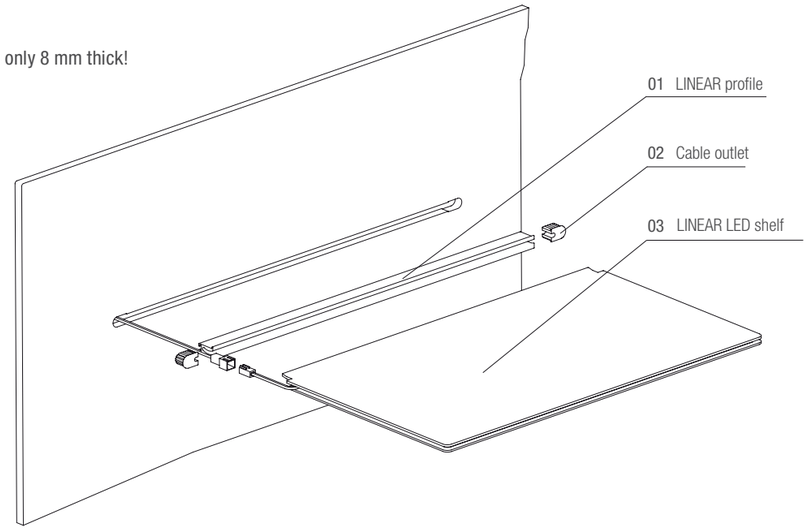

Side view

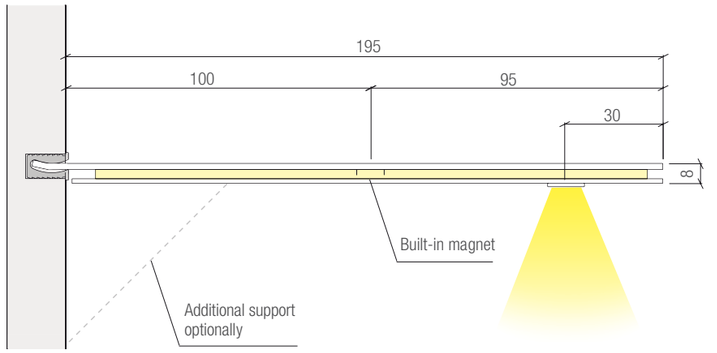

01. A

LINEAR rail in wooden panel

01. B

LINEAR rail in acrylic glass panel

Inserting the shelf into the rail

LINEAR LED

01

LINEAR profile, aluminium, cut by measure, sold by metre

max. 6000 x 9 x 14 mm

A.
for wooden panels L/13.01.10.06

B.
for acrylic glass panel L/13.01.11.06

A. B.

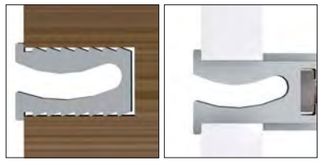

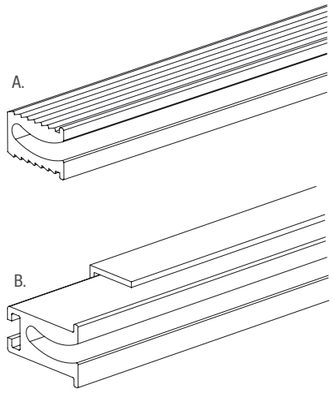

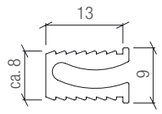

Side view

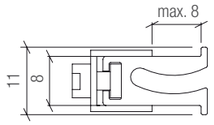

Side view

02
Cable outlet for LINEAR profile, pair

for wooden panels L/13.01.20.00

for acrylic glass panels L/13.01.20.01

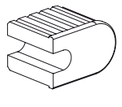

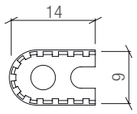

Front view

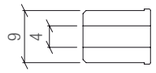

Side view

03
Signboard for exchangeable logos

150 x 70 x 15 mm L/14.09.01.03

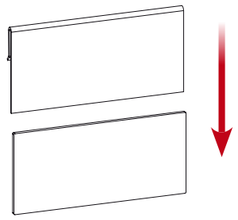

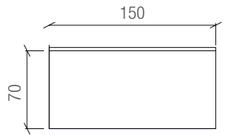

Top view

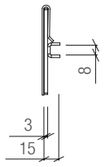

Side view

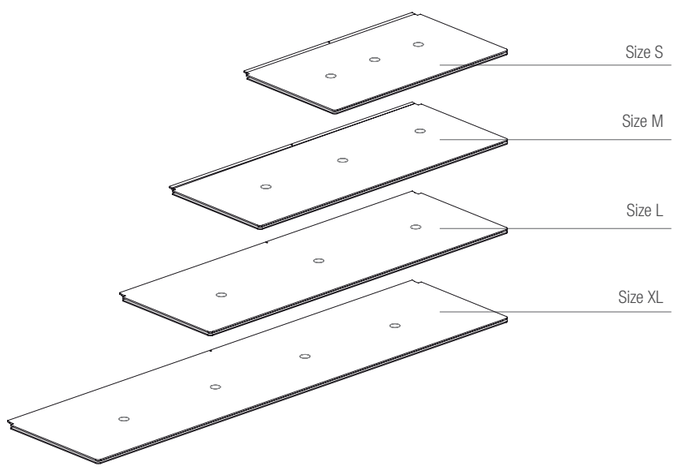

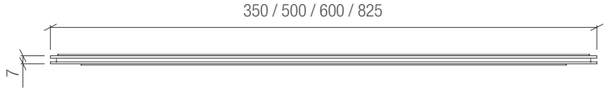

Top view

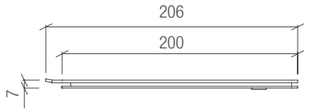

Side view

04

LINEAR LED shelf, aluminium, white powder-coated, and acrylic glass, polar-white, including LED illumination and integrated magnets

Size S (with 3 magnets)
350 x 200 mm L/14.18.06.00

Size M (with 3 magnets)
500 x 200 mm L/14.18.07.00

Size L (with 3 magnets)
600 x 200 mm L/14.18.08.00

Size XL (with 4 magnets)
825 x 200 mm L/14.18.09.00

max. 0,5 kg

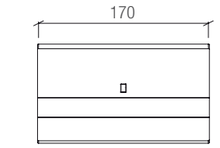

Top view

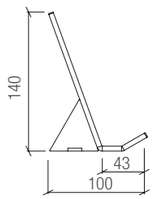

Side view

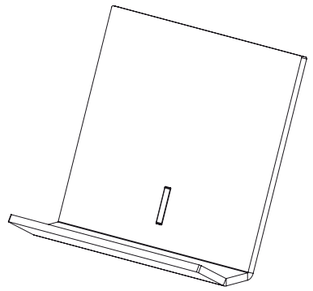

05
Inclined display made of acrylic glass, transparent, with integrated magnet

170 x 140 x 100 mm L/14.18.01.04

LINEAR LED

06

Display for 1-2 necklaces, made of acrylic glass, transparent, with integrated magnet

170 x 140 x 50 mm L/14.18.01.06

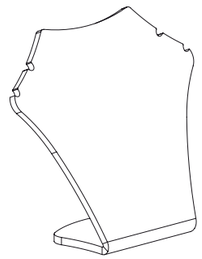

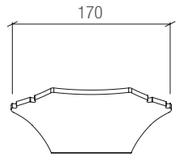

Top view

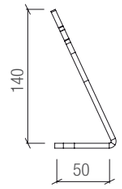

Side view

07

Display for 3 watches, made of acrylic glass, transparent, with clips for watches, with integrated magnet

170 x 140 x 100 mm L/14.18.01.07

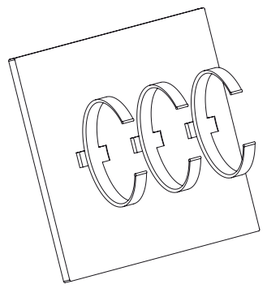

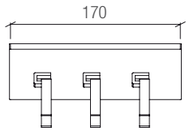

Top view

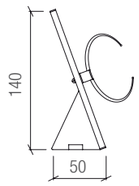

Side view

08

Display for 10 rings, made of acrylic glass, transparent, with sponge rubber, with integrated magnet

170 x 140 x 50 mm L/14.18.01.05

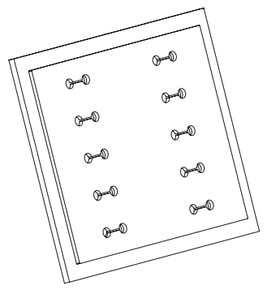

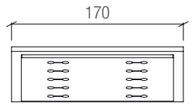

Top view

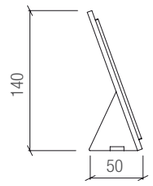

Side view

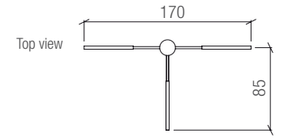

Top view

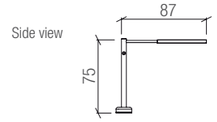

Side view

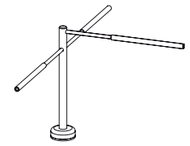

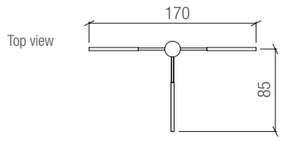

Top view

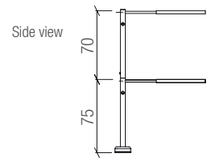

Side view

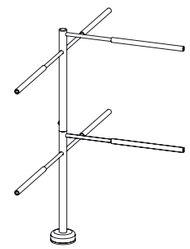

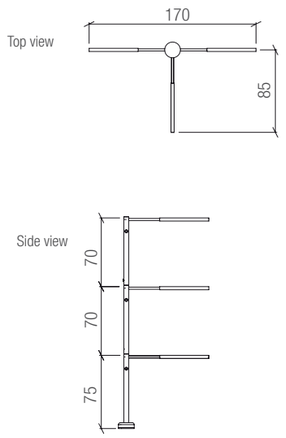

Top view

Side view

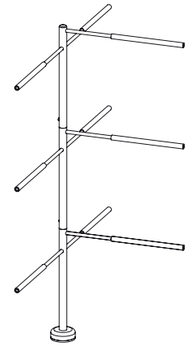

09

Single spectacle display, nickel-plated, with magnet

170 x 75 x 85 mm L/14.09.01.00

10

Double spectacle display, nickel-plated, with magnet

170 x 145 x 170 mm L/14.09.01.01

11

Triple spectacle display, nickel-plated, with magnet

170 x 215 x 170 mm L/14.09.01.02

LINEAR LED

OPTICS

HEARING CARE

WATCHES

JEWELLERY

FRAGRANCES + COSMETICS

SHOES

BAGS

LEATHER GOODS

ACCES-SORIES

CONSUMER ELECTRONICS

MOBILE PHONING

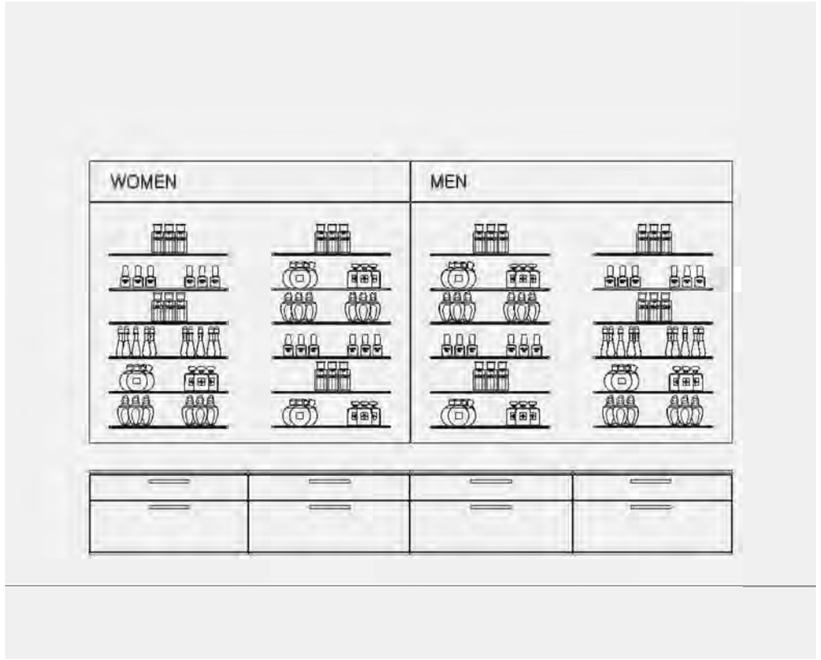

FRAGRANCES + COSMETICS

WATCHES JEWELLERY

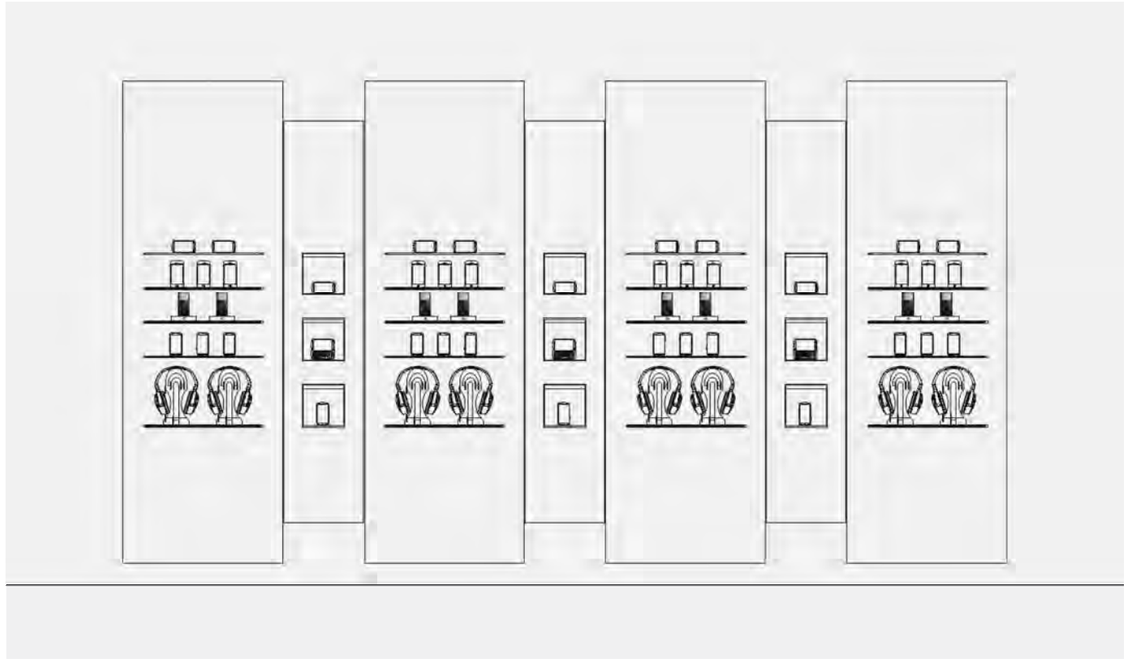

CONSUMER ELECTRONICS MOBILE PHONING

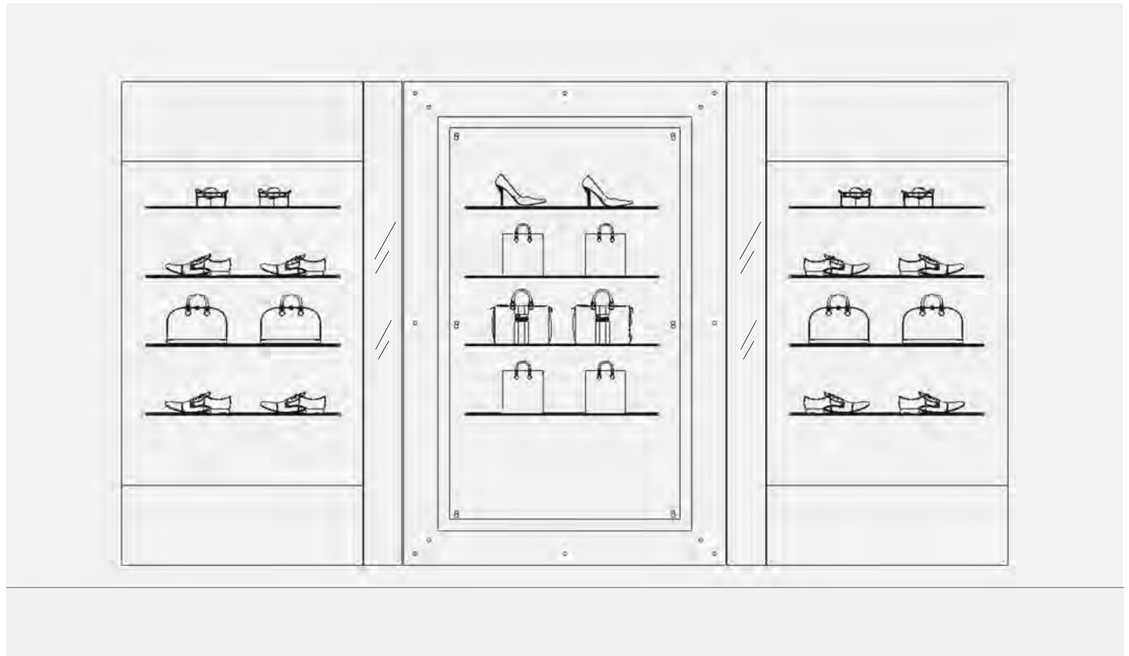

SHOES BAGS

LINEAR STRIPE

- OPTICS
- HEARING CARE
- WATCHES
- JEWELLERY
- FRAGRANCES + COSMETICS
- SHOES
- BAGS
- LEATHER GOODS
- ACCES-SORIES
- CONSUMER ELECTRONICS
- MOBILE PHONING
- HEALTH CARE/ PHARMACY

THANKS TO THE SATINED SURFACE THE MERCHANDISE IS UNIFORMLY ILLUMINA-TED, WHICH DISPLAYS T HE GOODS PER-FECTLY

LINEAR STRIPE

SMART SHELVING SYSTEM

LINEAR STRIPE

Our new LINEAR STRIPE shelves for LINEAR profile appeal through an elegant design. They have a built-in LED light at the bottom which illuminates underlying objects perfectly and brings to bear. Thanks to the satined surface the merchandise is uniformly illuminated, which underlines the sculptural character of the presentation and displays the goods perfectly.

Uniform illumination by LED

Further colours and materials available on request

Shelves optionally available in 3 different heights

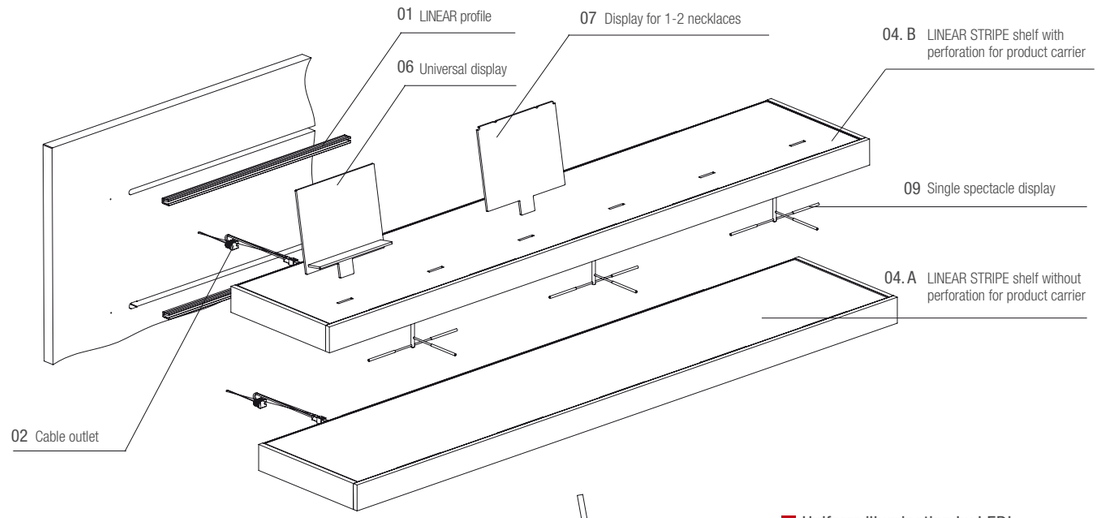

■ Uniform illumination by LED!

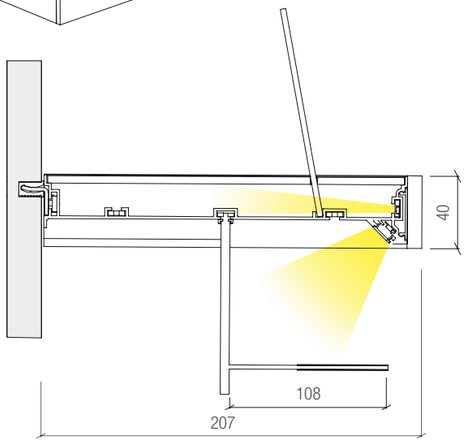

01. A

LINEAR rail in wooden panel

01. B

LINEAR rail in acrylic glass panel

Inserting the shelf into the rail

LINEAR STRIPE

01

LINEAR profile, aluminium, cut by measure, sold by metre

max. 6000 x 9 x 14 mm

A.
for wooden panels L/13.01.10.06

B.
for acrylic glass panels L/13.01.11.06

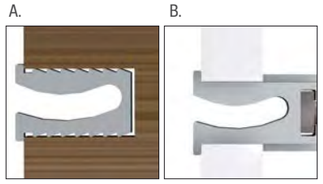

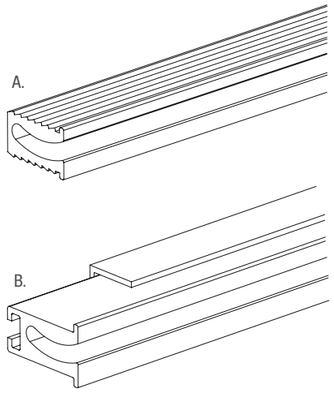

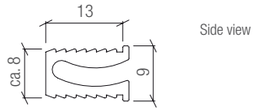

Side view

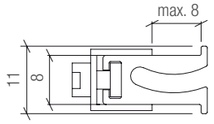

Side view

02

Cable outlet for LINEAR profile, pair

for wooden panels L/13.01.20.00

for acrylic glass panels L/13.01.20.01

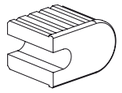

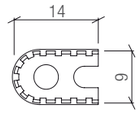

Front view

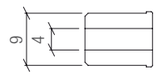

Side view

03

Profile connector, anodized aluminium

55 x 200 x 37 mm L/14.18.01.09

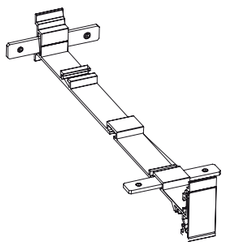

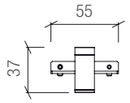

Front view

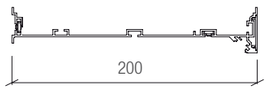

Side view

A.

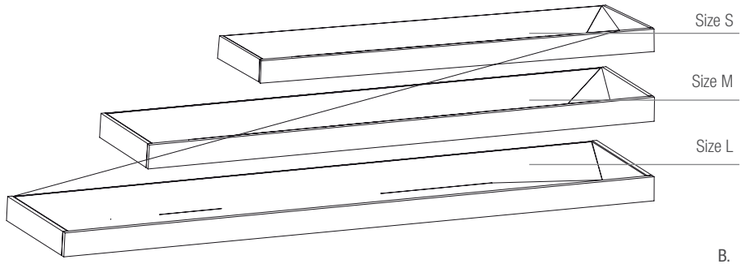

B.

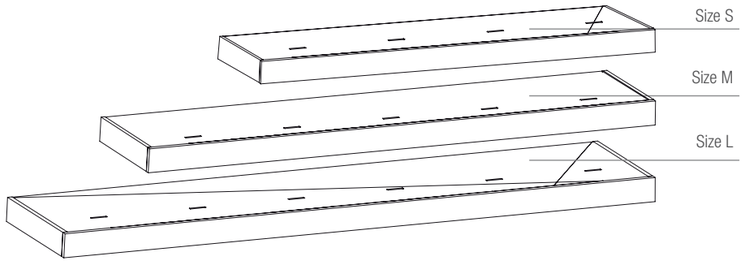

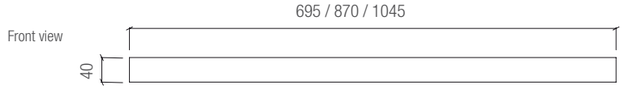

Front view

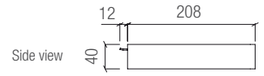

Side view

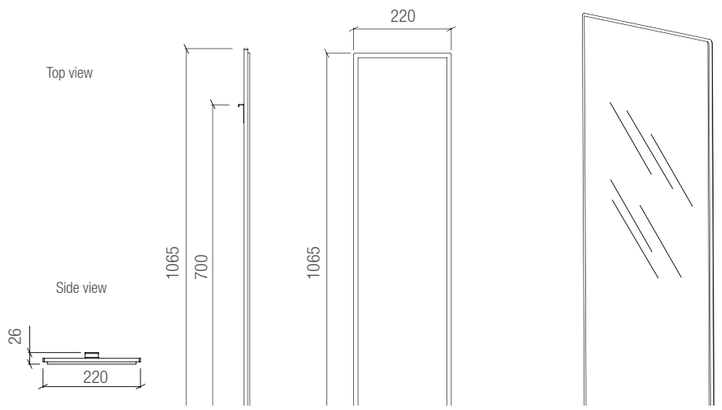

Top view

Side view

04

LINEAR STRIPE shelf, aluminium, white powder-coated, and acrylic glass, dualsatin, including LED illumination. Front cover made of acrylic glass, glossy white or glossy black.

A.
Without perforation for product carrier

Size S
695 x 40 x 208 mm L/14.19.07.00/01

Size M
870 x 40 x 208 mm L/14.19.09.00/01

Size L
1045 x 40 x 208 mm L/14.19.10.00/01

B.
With perforation for product carrier

Size S
695 x 40 x 208 mm L/14.19.07.05

Size M
870 x 40 x 208 mm L/14.19.09.05

Size L
1045 x 40 x 208 mm L/14.19.10.05

05

Mirror with back panel made of acrylic glass, glossy white

220 x 1065 x 26 mm L/14.18.01.10

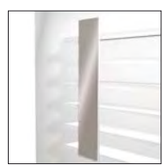

LINEAR STRIPE

06
Universal display made of acrylic glass, transparent

150 x 147 x 25 mm L/14.18.01.13

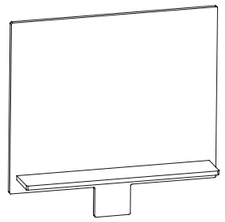

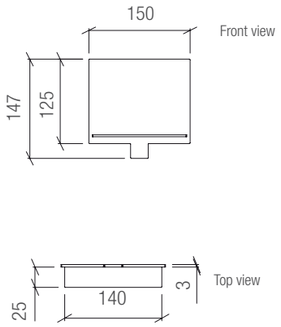

07
Display for 1-2 necklaces made of acrylic glass, transparent

150 x 147 x 3 mm L/14.18.01.15

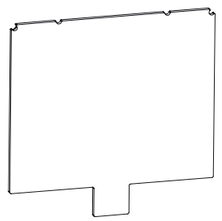

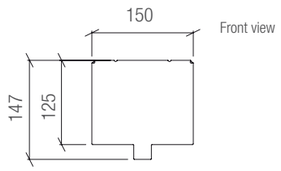

08
Display for 6 rings, made of acrylic glass, transparent

150 x 147 x 3 mm L/14.18.01.14

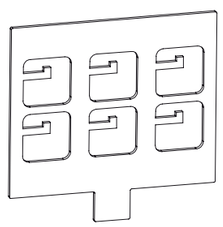

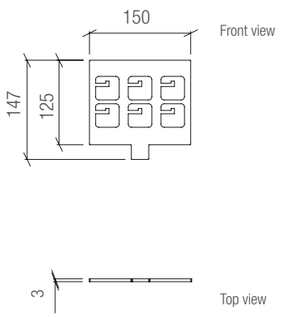

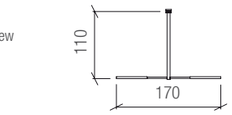

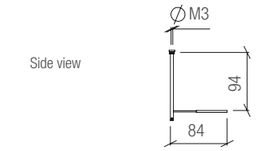

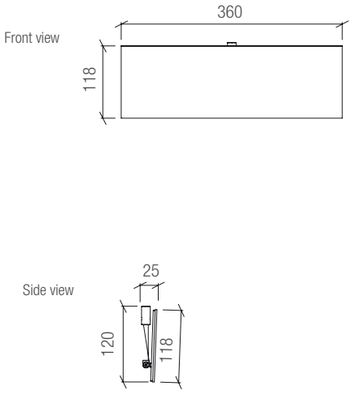

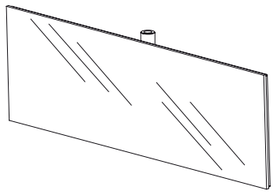

09
Single spectacle display, nickel-plated

170 x 110 x 84 mm L/14.18.01.12

10

Swivel mirror with back panel made of acrylic glass, glossy white

360 x 120 x 25 mm L/14.18.01.11

LINEAR STRIPE

OPTICS

HEARING CARE

WATCHES

JEWELLERY

FRAGRANCES + COSMETICS

SHOES

BAGS

LEATHER GOODS

ACCES-SORIES

CONSUMER ELECTRONICS

MOBILE PHONING

HEALTH CARE/ PHARMACY

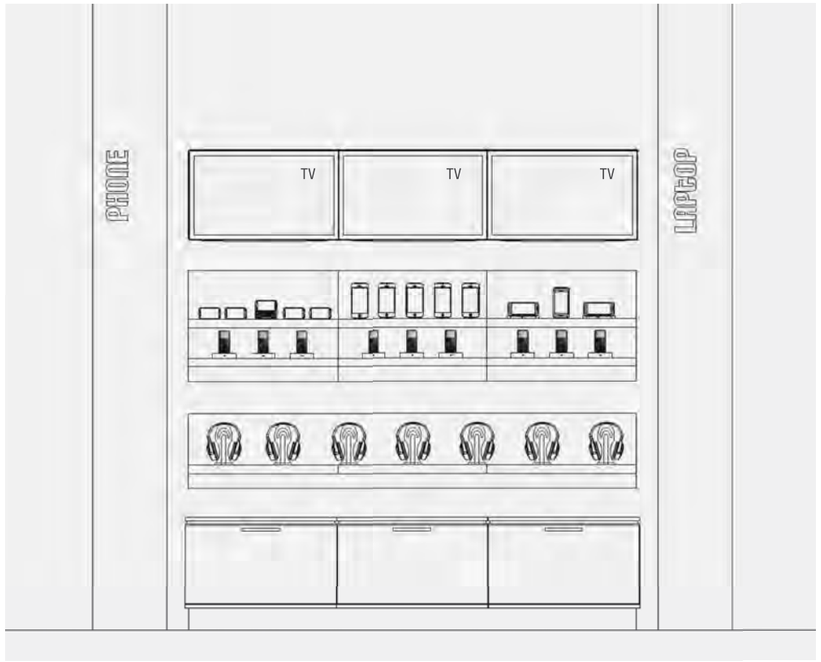

CONSUMER ELECTRONICS MOBILE PHONING

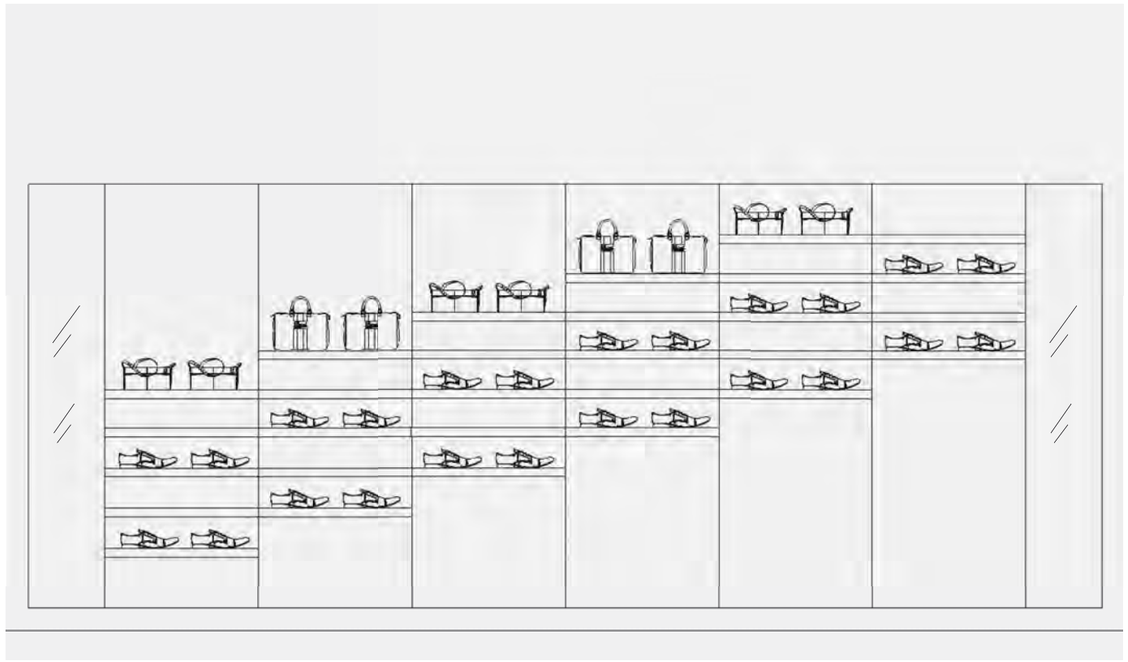

SHOES BAGS

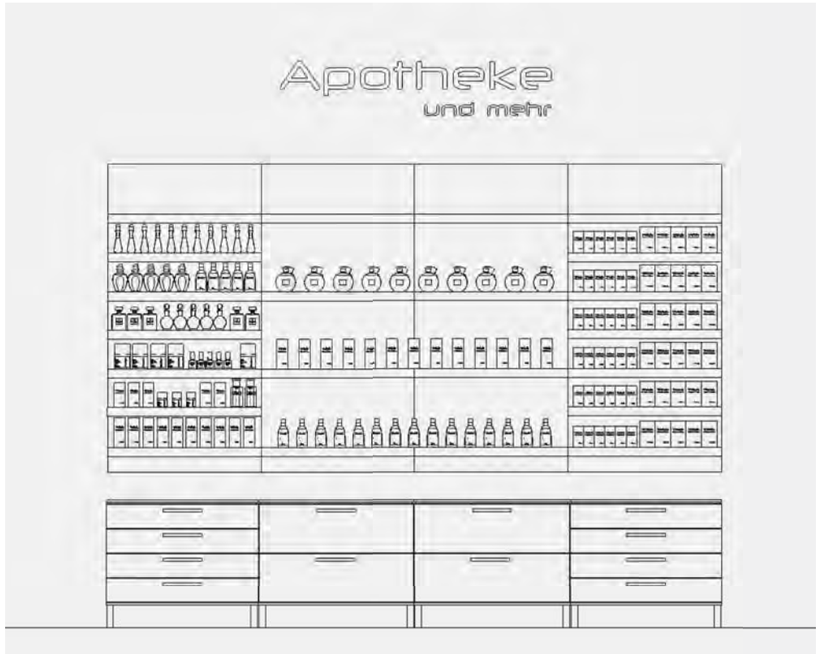

HEALTH CARE / PHARMACY FRAGRANCES + COSMETICS

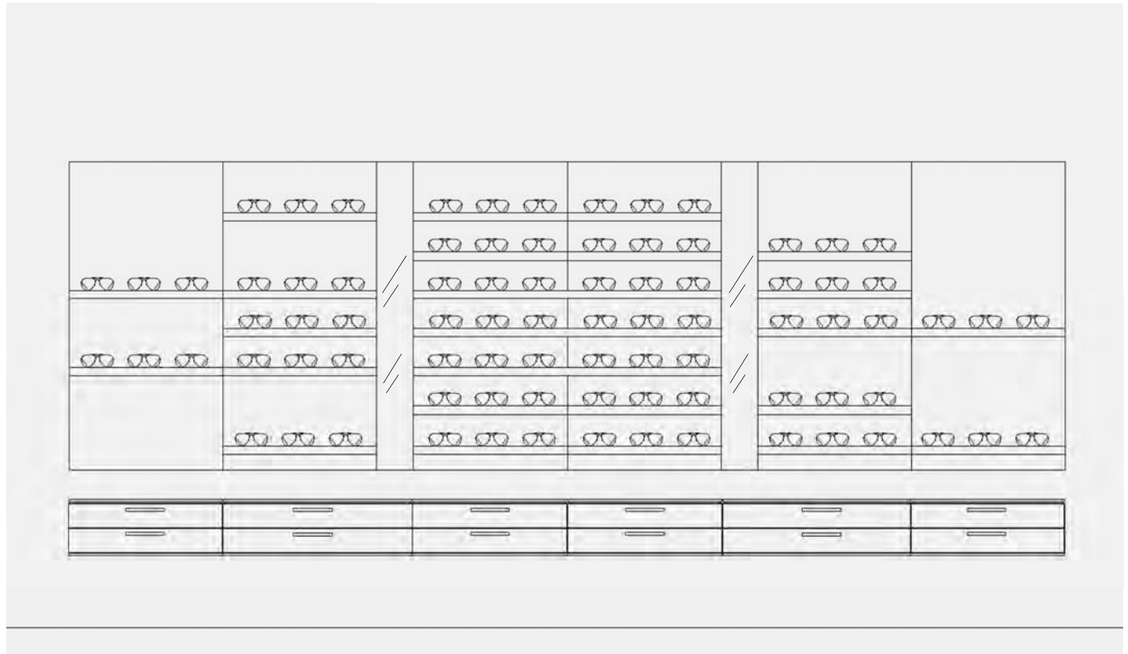

OPTICS

PUR 2

OPTICS

WATCHES

FRAGRANCES + COSMETICS

LEATHER GOODS

ACCES-SORIES

BLISTER

SPORTS

UP-TO-DATE AND ALTERABLE

PUR 2

HORIZONTAL PRESENTATION - VARIABLE IN EQUIPMENT

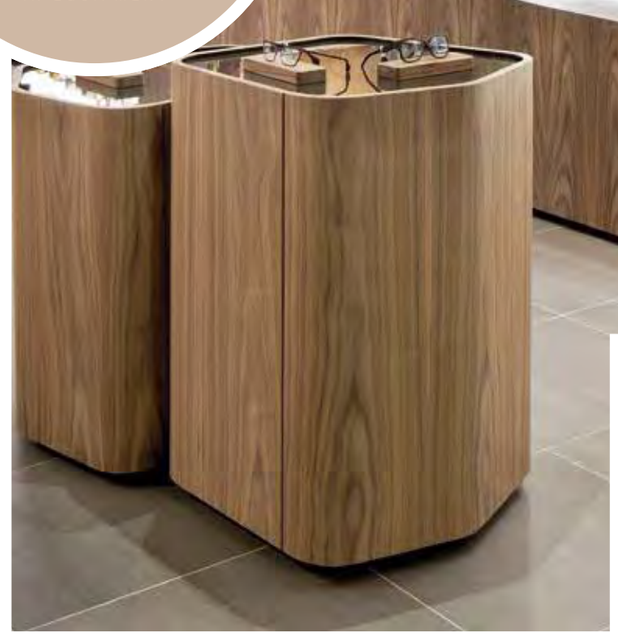

THE BASIC ELEMENT IS A SOPHISTICATED BAR WHERE SYSTEM COMPONENTS CAN BE CLICKED ONTO EAS

PUR 2

With its classy and timeless design our PUR 2 system provides the optimal preconditions for being integrated into the most different shop concepts and ambiances. The basic element is a sophisticated bar where system components can be clicked onto easily by means of a plastic adapter. For this reason PUR 2 is also extremely versatile for designing a display area and can be customized at any time with little effort.

Clicking the adapter onto the profile rail

Simple hooking of shelves

Components can be slided along the profile rail

PUR 2 – easy handling

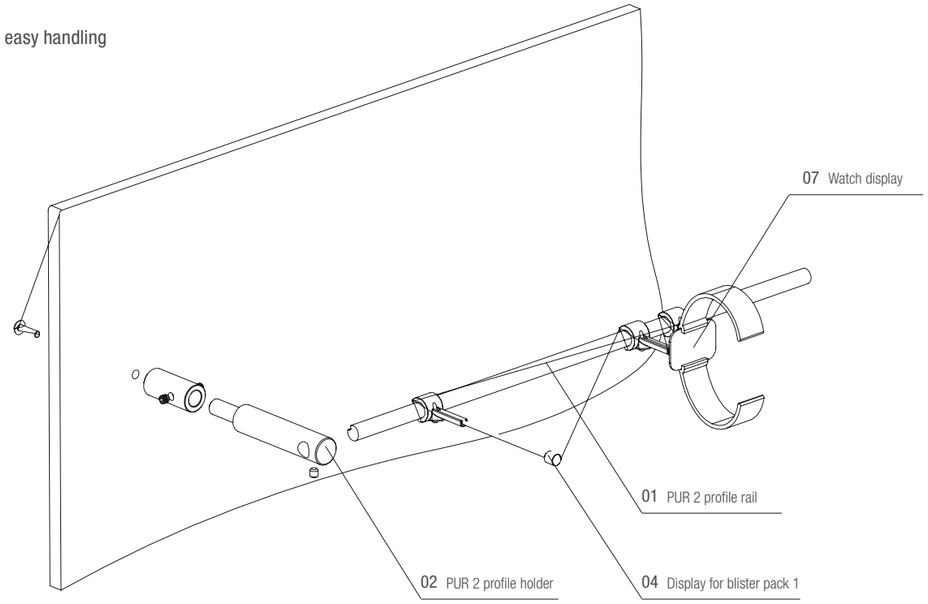

Side view

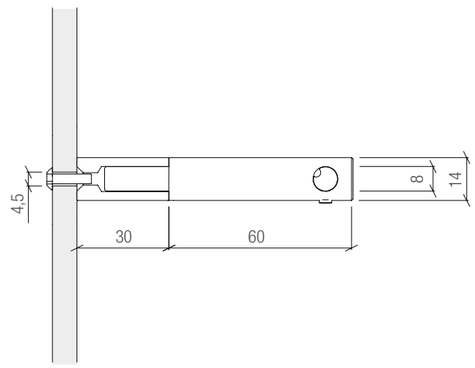

Assembly on acrylic glass panel

Assembly on wooden panel

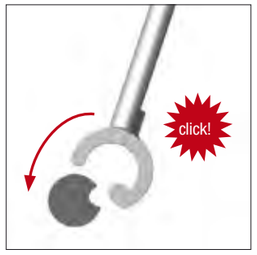

Redecorating with just one click

PUR 2

01
PUR 2 profile rail, aluminium, cut by measure, sold by metre

Ø 8 mm

Length
max. 6000 mm 14.09.11.00

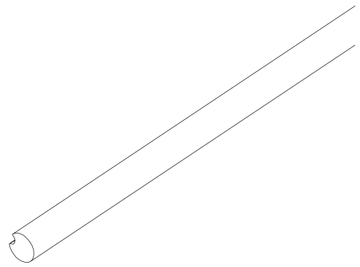

Side view

02
PUR 2 profile holder, wall mounting
kit included

Ø 14 x 90 mm

for acrylic glass 14.09.11.01

for wall/wood 14.09.11.05

Front view

Side view

03
Single spectacle display, nickel-plated

10 x 40 x 103 mm 14.09.10.02

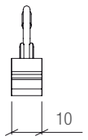

Front view

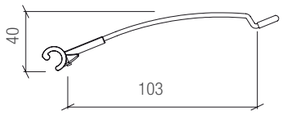

Side view

Front view

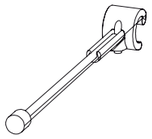

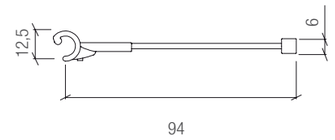

Side view

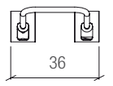

Front view

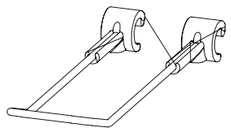

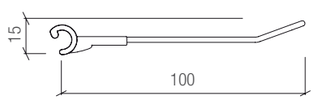

Side view

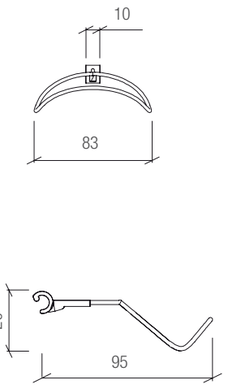

Front view

Side view

04
Display for blister pack 1, nickel-plated

10 x 12,5 x 94 mm 14.18.00.01

max. 0,1 kg

05
Display for blister pack 2, nickel-plated

36 x 15 x 100 mm 14.18.00.12

max. 0,2 kg

06
Spectacle case display, nickel-plated

83 x 20 x 95 mm 14.19.10.00

PUR 2

07
Watch display made of stainless steel, with PUR 2 adapter, including plastic clip for watches

36 x 70 x 72 mm 14.18.00.13

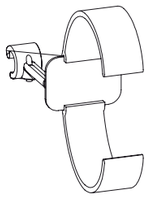

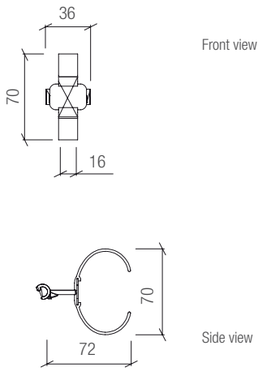

08
Decovase, test tube with support

Ø 15 mm

Height 150 mm 14.18.03.01

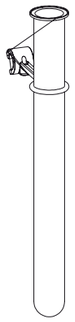

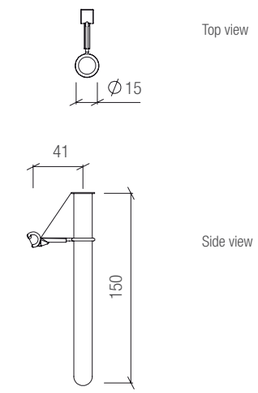

09
A.
Shelf (printing on request)

180 x 115 x 60 mm 14.18.02.00

B.
Shelf with mirror

180 x 115 x 60 mm 14.18.02.01

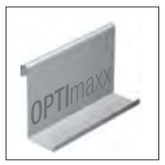

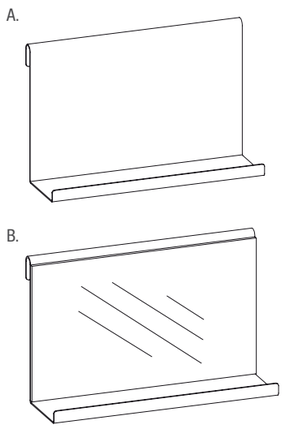

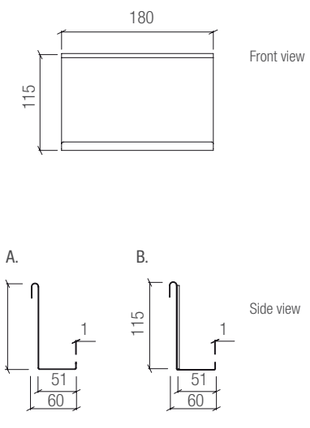

10
Inclined shelf DIN A 6

120 x 163 x 37 mm 14.18.02.03

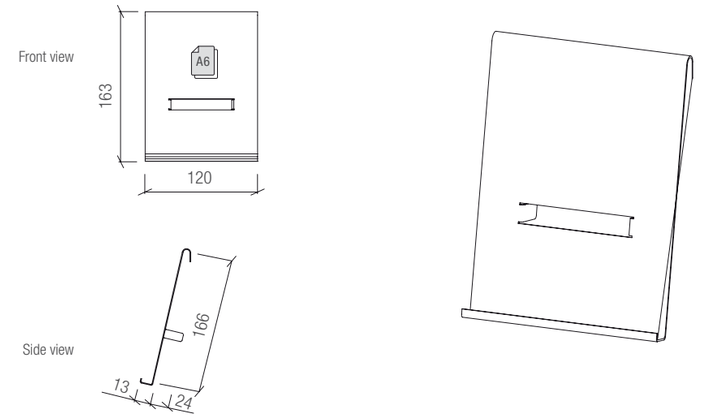

11
Inclined shelf for ski goggles

180 x 143 x 119 mm 14.18.02.04

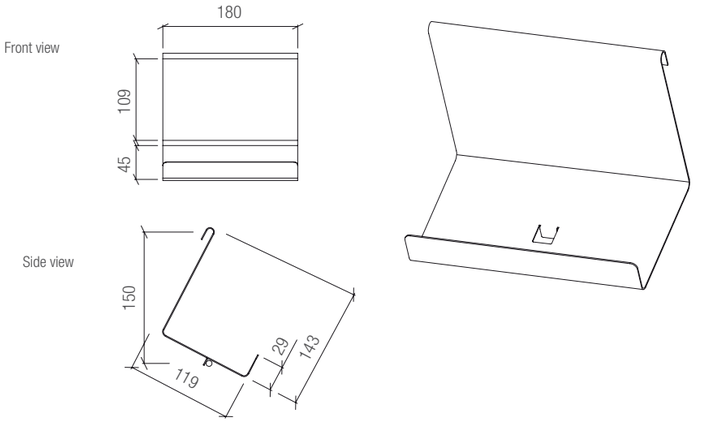

12
Shelf XL (printing on request)

250 x 115 x 120 mm 14.18.02.02

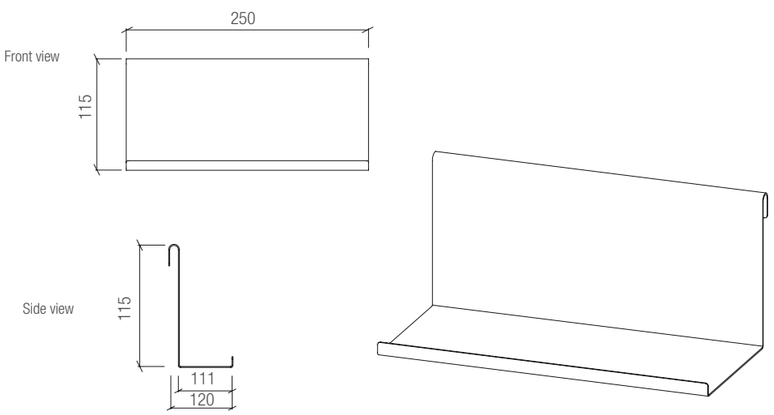

PUR 2

13

Poster panel DIN A4 for exchangeable graphics

210 x 312 x 16 mm 14.18.03.02

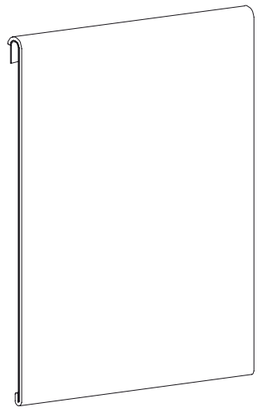

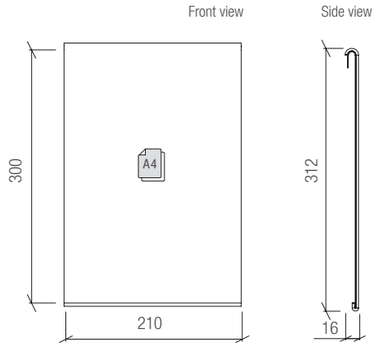

14

Signboard for exchangeable logos

150 x 70 x 34 mm 14.18.03.03

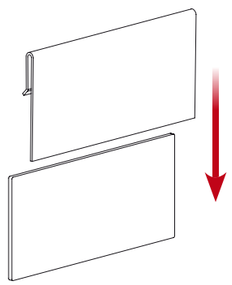

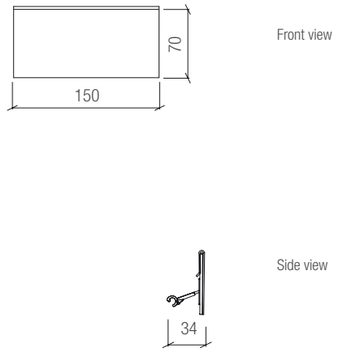

15

Mirror

180 x 185 x 12 mm 14.18.01.00

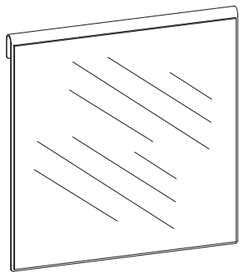

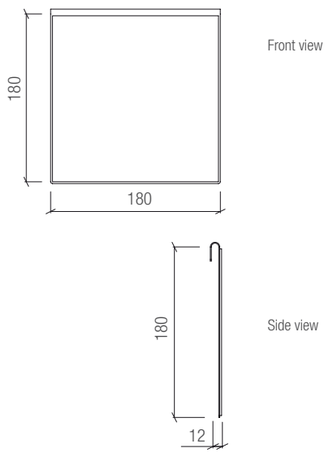

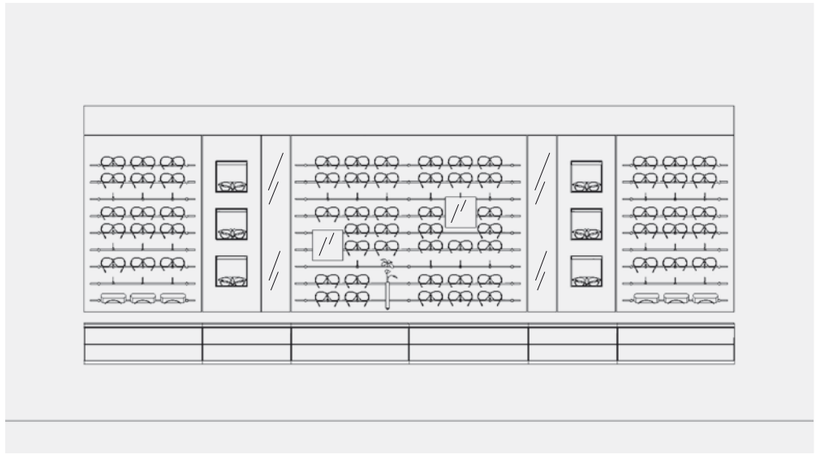

OPTICS

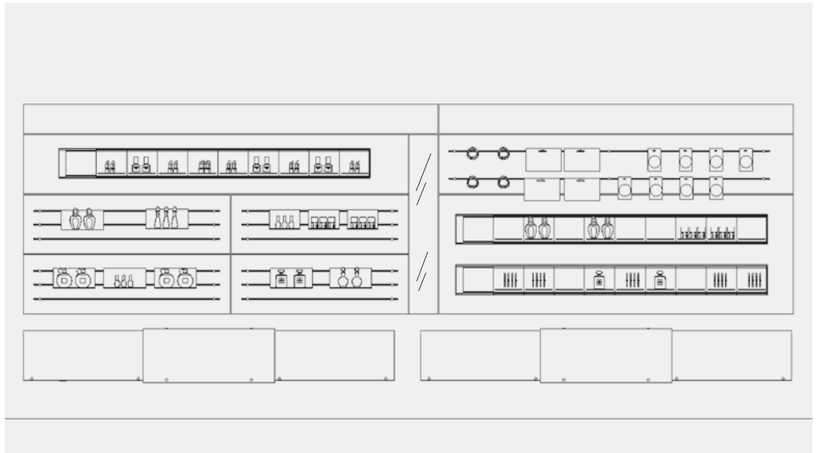

FRAGRANCES + COSMETICS BLISTER

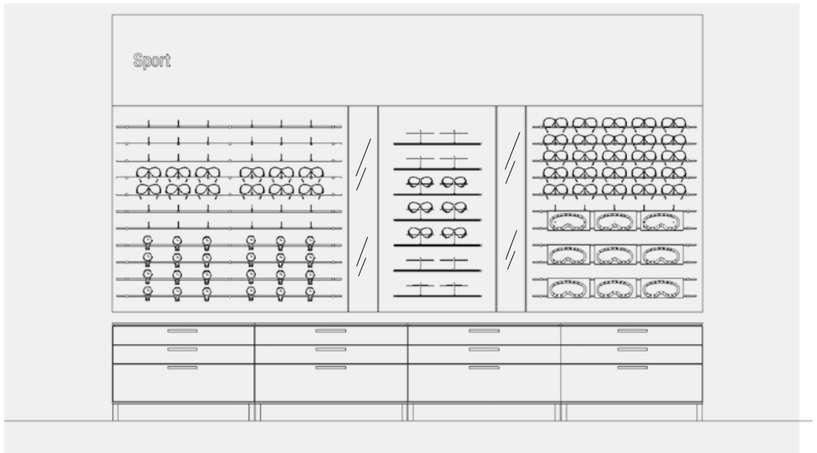

OPTICS WATCHES SPORTS

Fields of application

- OPTICS
- WATCHES
- FRAGRANCES + COSMETICS
- LEATHER GOODS
- ACCES-SORIES
- BLISTER
- SPORTS

B-TWEEN

OPTICS

WATCHES

JEWELLERY

FRAGRANCES + COSMETICS

LEATHER GOODS

ACCES-SORIES

MOBILE PHONING

B-TWEEN SYSTEM RAIL WITH INTEGRATED LED BACKLIGHTING

B-TWEEN

COUNTLESS DESIGN POSSIBILITIES AT 3 LEVELS

THE SYSTEM RAIL CAN BE EQUIPPEDW ITHP RODUCT CARRIERS FROM ABOVE AND BELOW

B-TWEEN

B-TWEEN is a shop design system with integrated LED backlighting for new product presentation! Different product carriers can get plugged in from above or below onto the system rail and are fixed by screwing. Even interspaces can be utilized optionally: Other display elements can be easily inserted. Countless design options depending on requirements and personal taste are a result of this latest system.

Variable presentation:
horizontally adjustable

Optimum way to use interspace

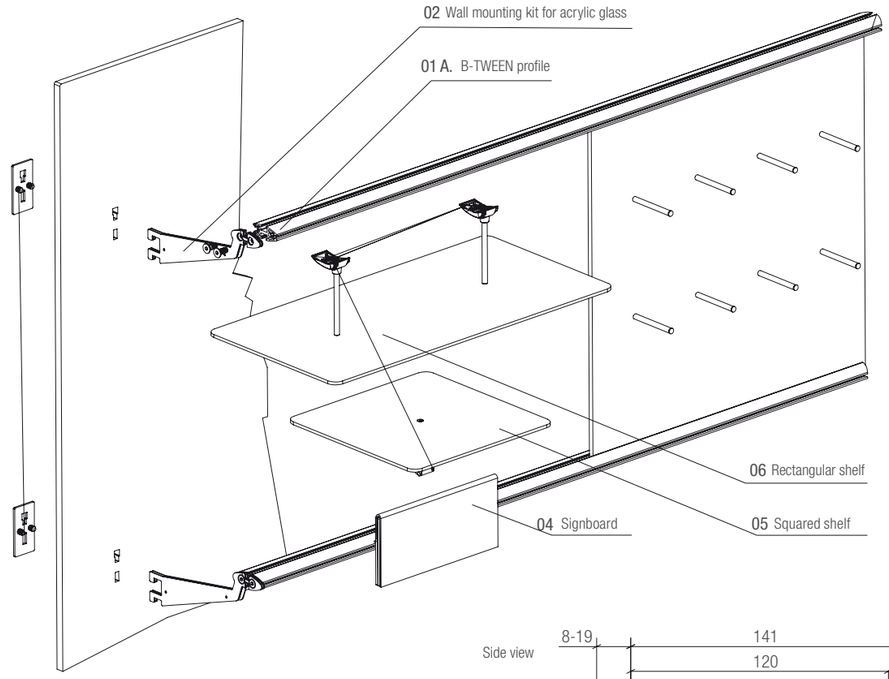

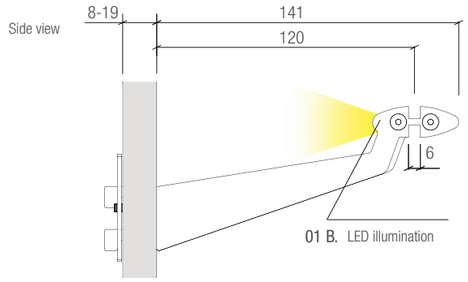

■ Flexible presentation on three levels!

02

Wall mounting kit, one pair, for mounting onto acrylic glass*

03

Additional fixation for mounting onto acrylic glass (starting from 1.5 m profile length)

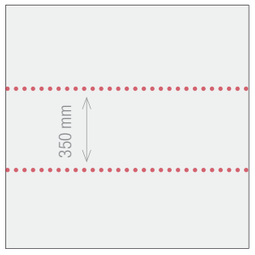

Recommended grid

B-TWEEN

01
A.
B-TWEEN profile, aluminium, cut by mesure, sold by metre

max. 6000 x 33 x 14 mm
12.00.00.00

B.
LED illumination, sold by metre, including power supply
12.00.00.11

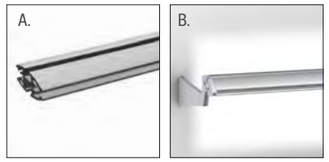

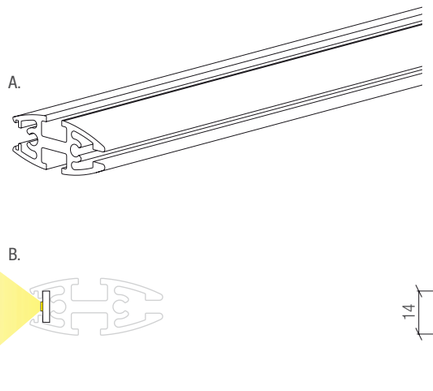

02
Wall mounting kit, one pair, for mounting onto acrylic glass

120 x 45 mm 12.00.00.05

Wall mounting kit, one pair, for mounting onto plasterboard/brickwork

on request

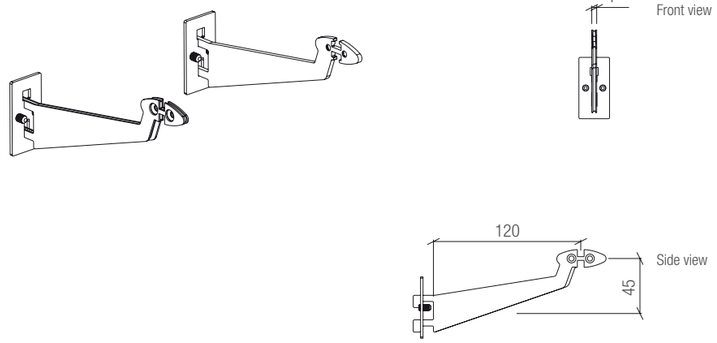

03
Additional fixation for mounting onto acrylic glass (starting from 1.5 m profile length)

120 x 45 mm 12.00.00.06

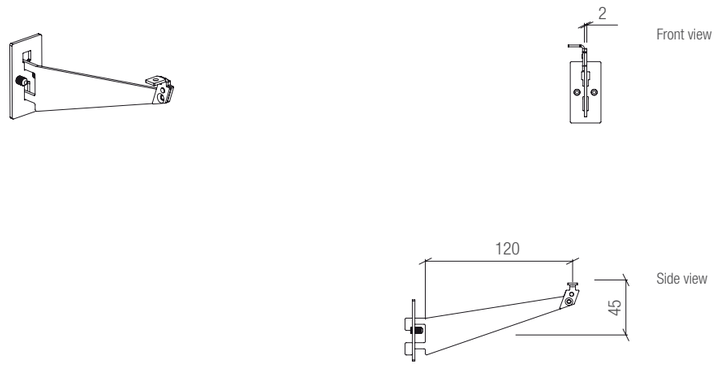

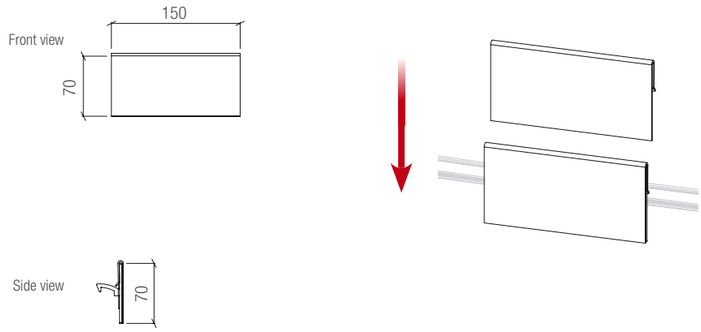

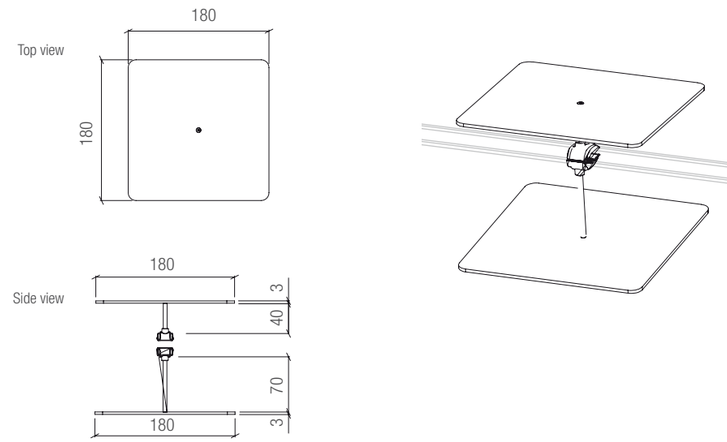

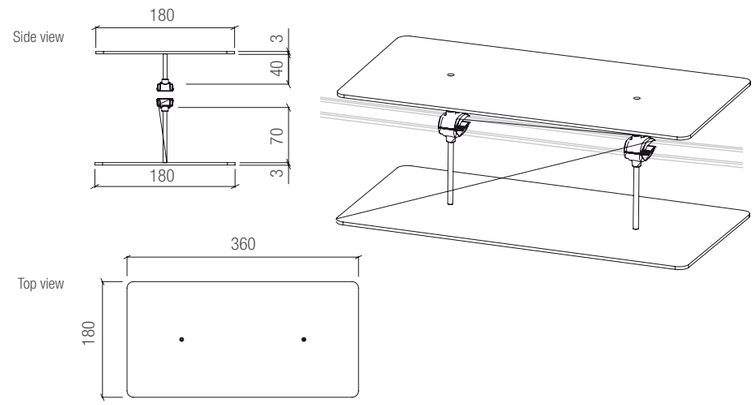

04

Signboard, made of acrylic glass, for exchangeable logos

150 x 70 mm 12.00.10.18

05

Squared shelf, made of acrylic glass, transparent

top
180 x 43 x 180 mm 12.00.10.09

bottom
180 x 73 x 180 mm 12.00.11.09

06

Rectangular shelf, made of acrylic glass, transparent

top
360 x 43 x 180 mm 12.00.10.10

bottom
360 x 73 x 180 mm 12.00.11.10

B-TWEEN

07
Acrylic glass box, single, made of acrylic glass, transparent

top
180 x 119 x 80 mm 12.00.10.20

bottom
180 x 149 x 80 mm 12.00.11.20

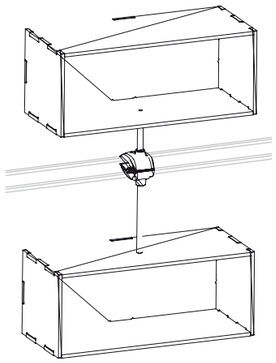

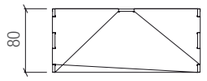

Top view

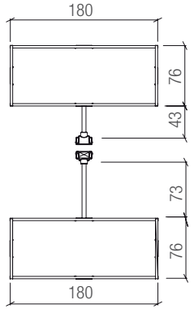

Front view

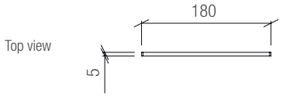

Top view

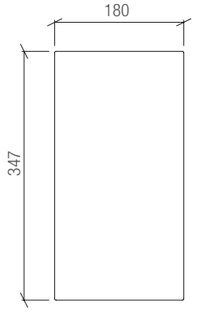

Front view

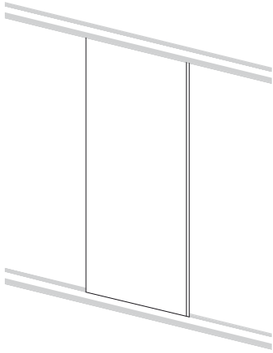

10
Graphic panel, made of acrylic glass, dualsatin (printing on request)

180 x 347 x 5 mm 12.00.10.04

08
Universal round shelf with ring, made of acrylic glass, transparent

Ø 150 mm
Height 180 mm 12.00.10.22

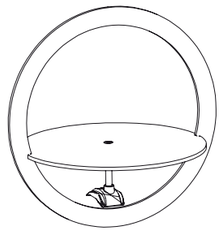

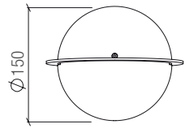

Top view

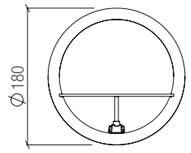

Front view

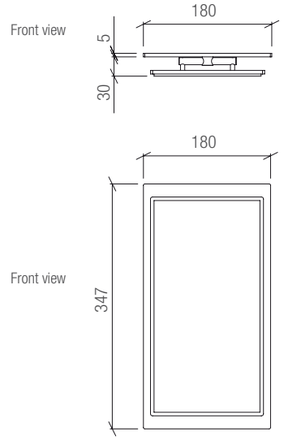

Front view

Front view

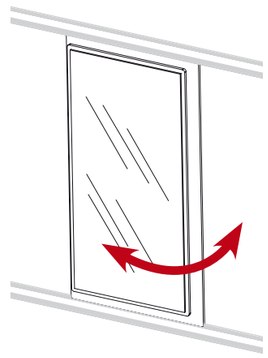

11
Mirror, vertical, adjustable inclination

180 x 347 x 30 mm 12.00.10.05

09
Round shelf for spectacles, with ring, made of acrylic glass, transparent

Ø 150 mm
Height 180 mm 12.00.10.06

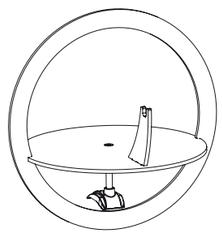

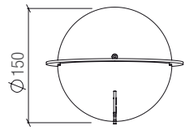

Top view

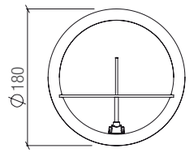

Front view

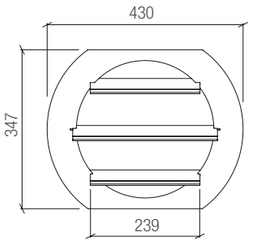

Front view

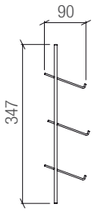

Side view

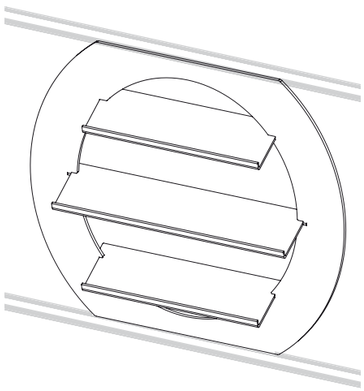

12
Circle with 3 shelves, made of acrylic glass, transparent

430 x 347 x 90 mm 12.00.10.12

B-TWEEN

OPTICS

WATCHES

JEWELLERY

FRAGRANCES + COSMETICS

LEATHER GOODS

ACCES-SORIES

MOBILE PHONING

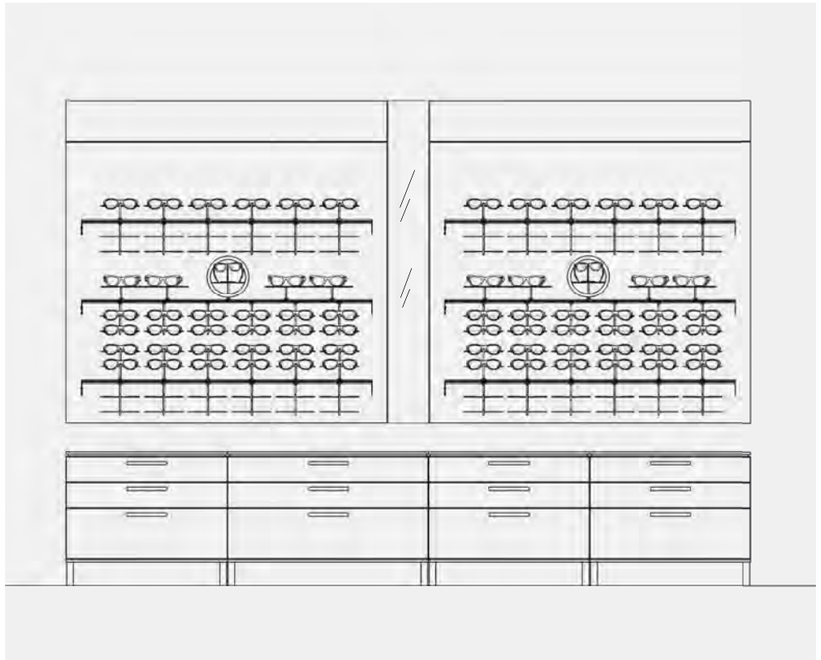

OPTICS

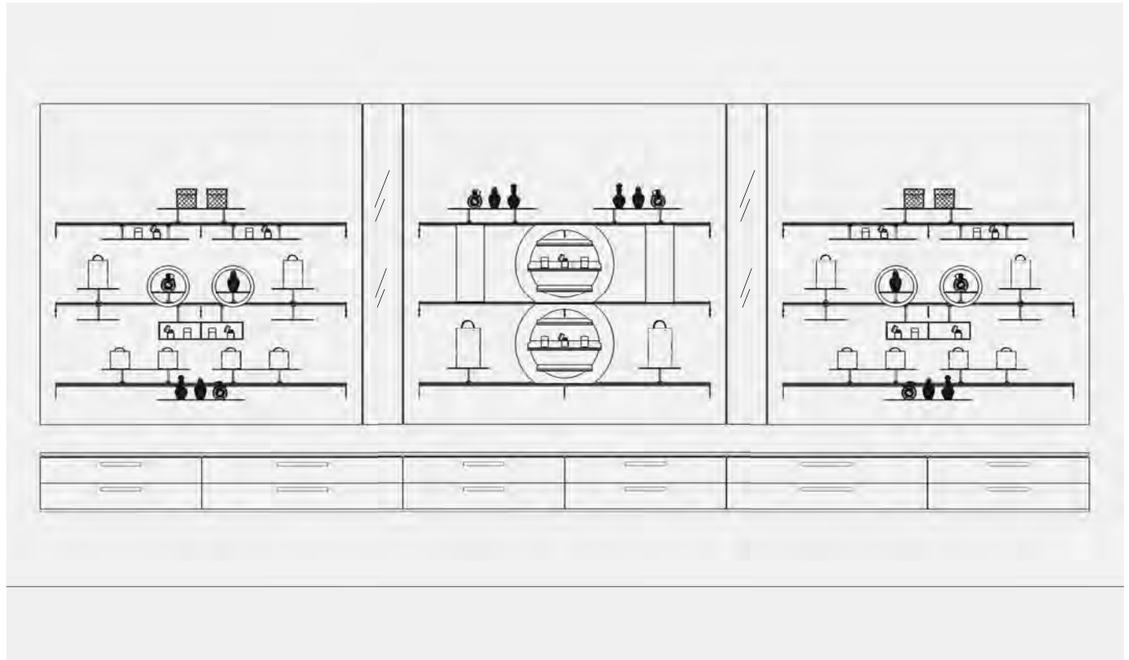

FRAGRANCES + C OSMETICS ACCESSORIES

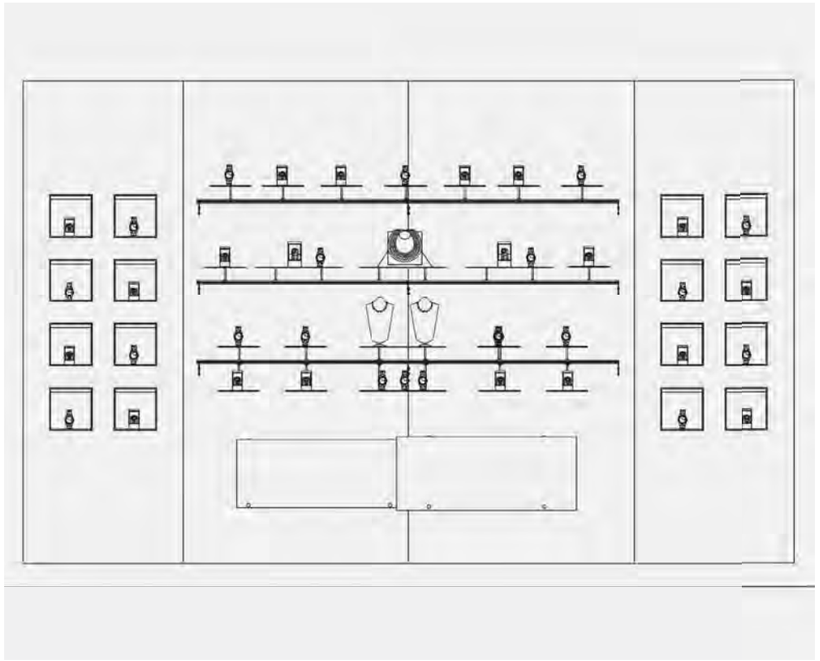

WATCHES JEWELLERY

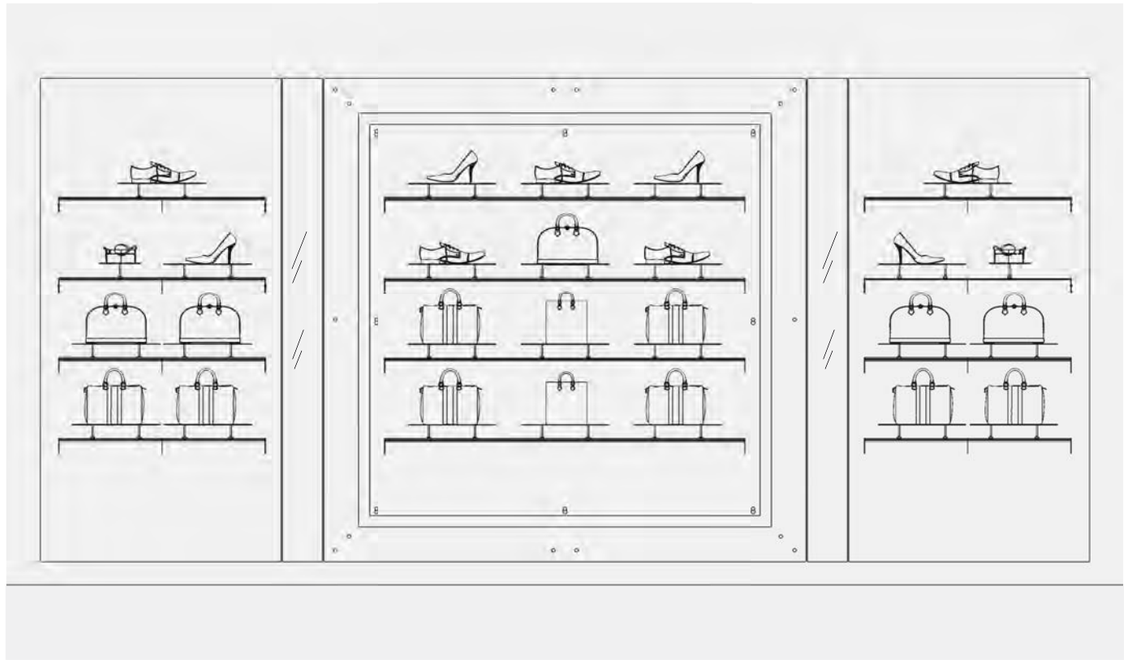

ACCESSORIES

SLIDE

Fields of application

- OPTICS
- HEARING CARE
- WATCHES
- JEWELLERY
- ACCES-SORIES
- MOBILE PHONING

SLIDE

LARGE SELECTION OF PRODUCT CARRIERS

PROTECTION AGAINST SHOP-LIFTING AND DUST AT THE SAME TIME

AFTER UNLOCKING ONLY ONE PRODUCT CARRIER IS RELEASED WHILE THE OTHERS STAY SECURED

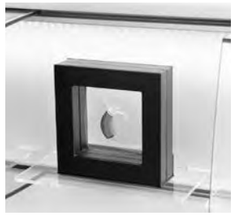

SLIDE

With SLIDE, high-quality products are played to the gallery and protected against shop-lifting and dust at the same time. The particular is: after unlocking the system only one product carrier is released at a time while the others stay secured!
SLIDE can be created correspondingly to your demands. Select from a variety of different product carriers, different colour variations and covers. Or decide on integrating the GLOW illumination system to highlight the merchandise display.

Unlock system

Slide display boxes

Take out merchandise

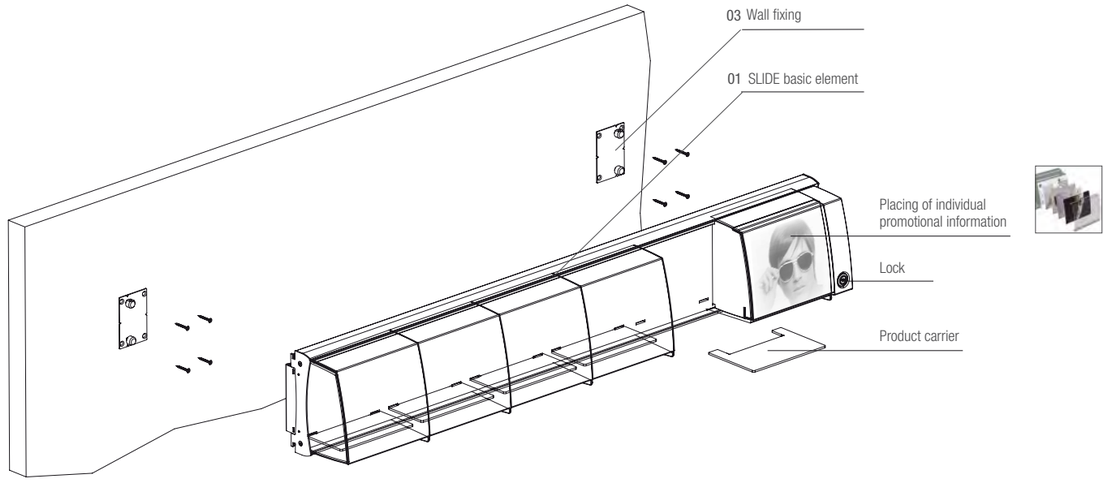

- Classy display and reliable safety

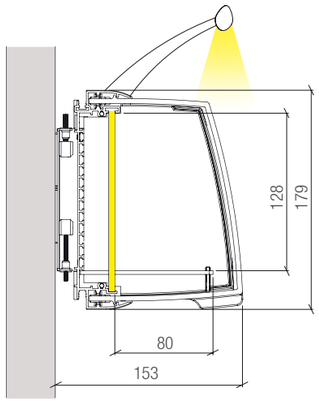

03

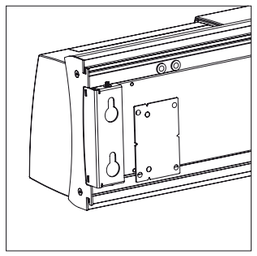

Wall fixing for mounting onto plasterboard/brickwork

04

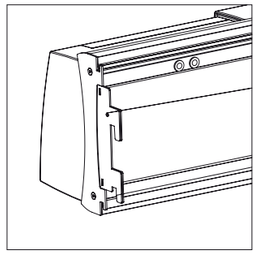

Wall fixing for mounting onto acrylic glass (thickness: 8 mm)

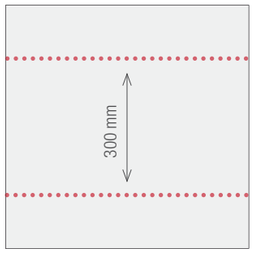

Recommended grid

SLIDE

01

SLIDE basic element, speed frame and display boxes made of polycarbonate, transparent, including locking box and end cover

SL 5 with 5 display boxes

Length **1125 mm** 50.10.00.05

SL 7 with 7 display boxes

Length **1485 mm** 50.10.00.07

SL 9 with 9 display boxes

Length **1845 mm** 50.10.00.09

Note: Special lengths on request!

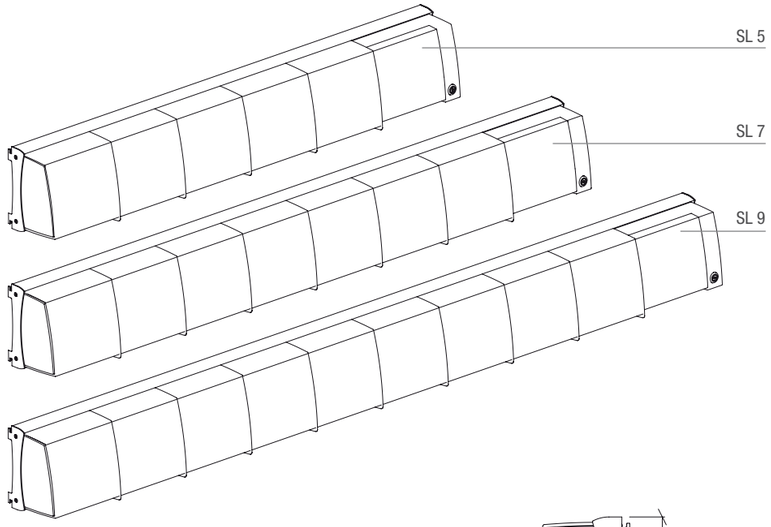

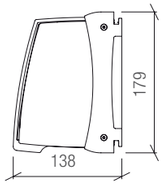

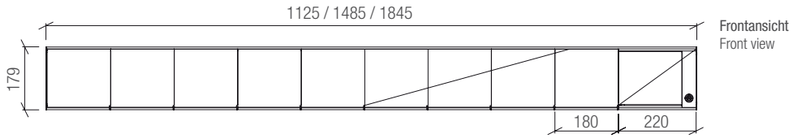

02

GLOW LED illumination bar

für for **SL 5** 50.00.07.05
für for **SL 7** 50.00.07.07
für for **SL 9** 50.00.07.09

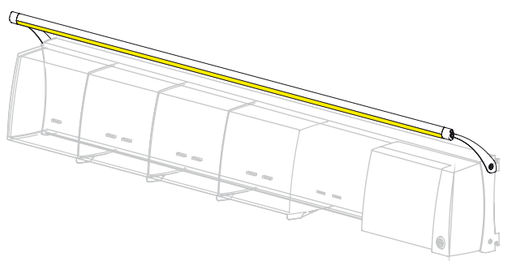

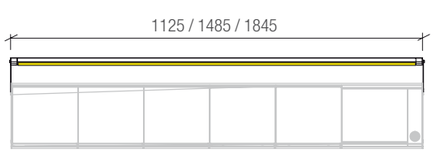

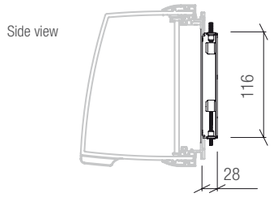

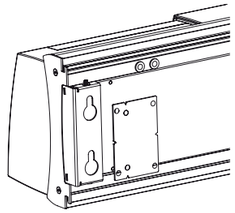

03
Wall fixing, one pair, for mounting onto plasterboard/brickwork

28 x 116 mm 50.00.00.11

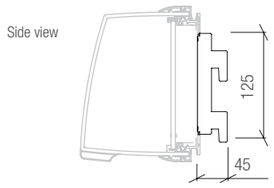

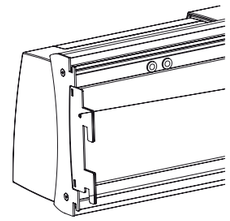

04
Wall fixing, one pair, for mounting onto acrylic glass (thickness: 8 mm)

45 x 125 mm 50.00.00.12

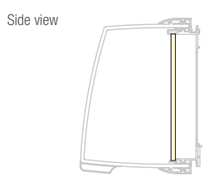

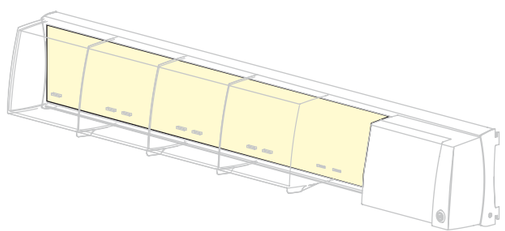

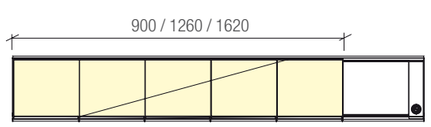

05

LED backlight

für for **SL 5** 50.00.05.05
für for **SL 7** 50.00.05.07
für for **SL 9** 50.00.05.09

SLIDE

06
Mirror with back panel, made of acrylic glass, glossy white

360 x 150 x 5 mm 50.00.00.02

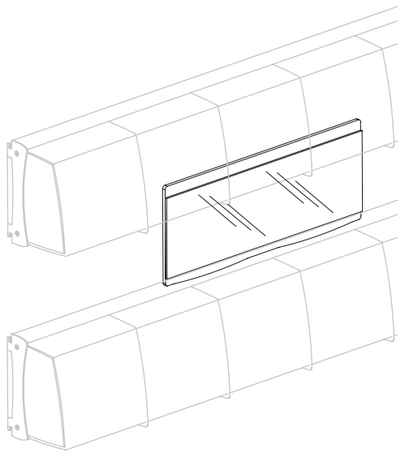

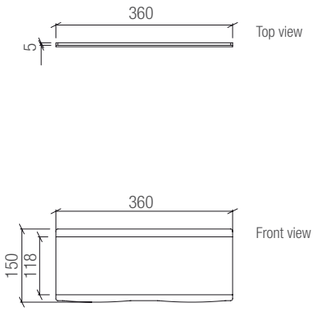

07
Intermediate cover made of acrylic glass, dualsatin (printing on request)

180 x 150 x 5 mm 50.00.00.01

360 x 150 x 5 mm 50.00.00.00

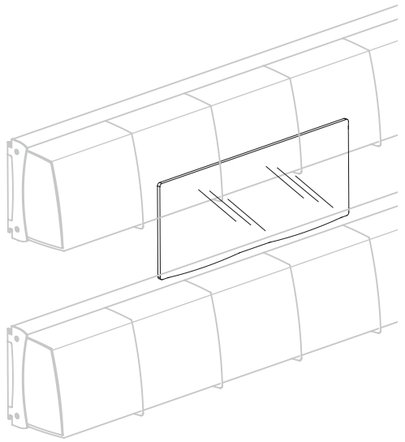

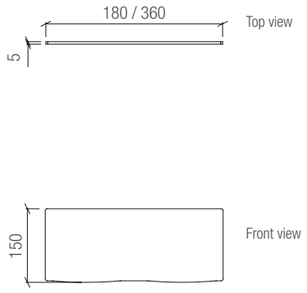

08
Shelf, single, made of acrylic glass, transparent

160 x 3 x 107 mm 50.00.06.01

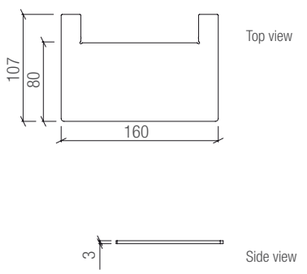

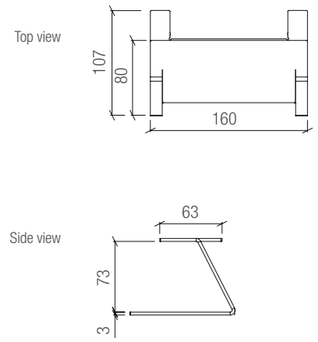

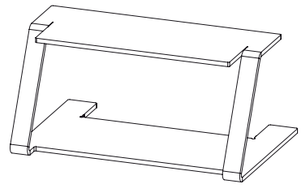

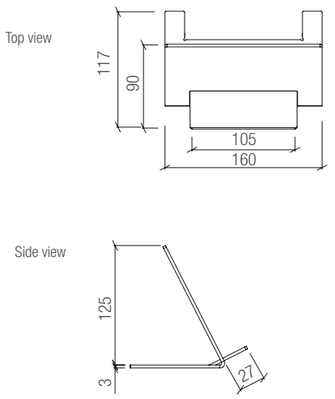

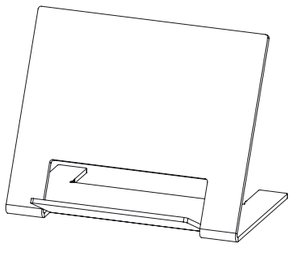

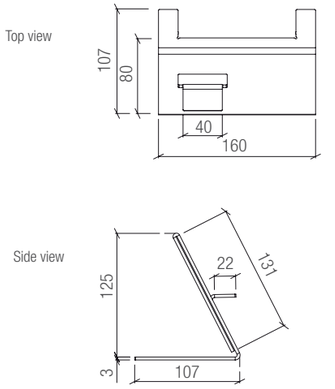

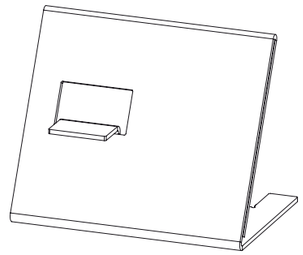

09
Shelf, double, made of acrylic glass, transparent

160 x 73 x 107 mm 50.00.06.02

Triangle display for rings, made of acrylic glass, polarwhite

30 x 43 x 8 mm 50.00.06.27

10
Inclined display made of acrylic glass, transparent

160 x 125 x 117 mm 50.00.06.18

11
Inclined display for small goods, made of acrylic glass, transparent

160 x 125 x 107 mm 50.00.06.37

SLIDE

12
Inclined display with info area made of acrylic glass, transparent

160 x 125 x 117 mm 50.00.06.17

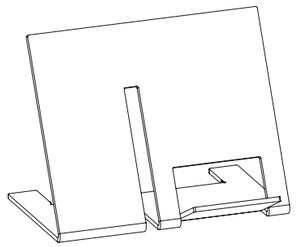

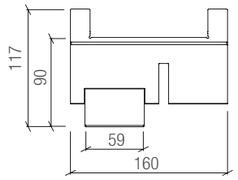

Top view

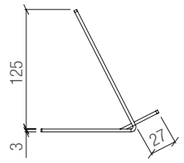

Side view

13
Display for 1 necklace made of acrylic glass, transparent

160 x 125 x 107 mm 50.00.06.24

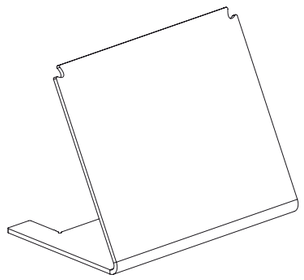

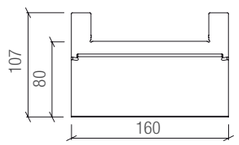

Top view

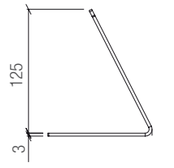

Side view

14
Display for 10 rings, made of acrylic glass, transparent, with sponge rubber

160 x 125 x 107 mm 50.00.06.19

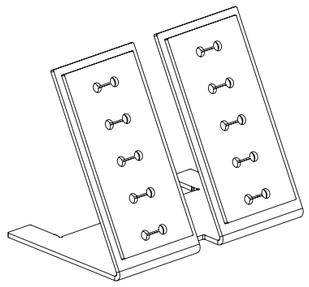

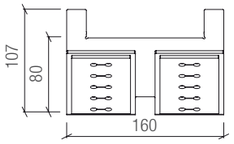

Top view

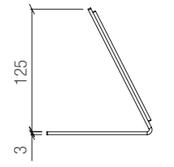

Side view

Top view

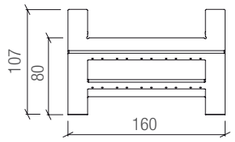

Side view

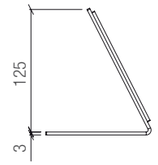

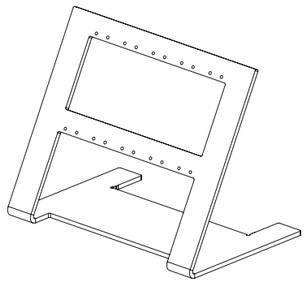

15
Display for 10 pairs of earrings (up to 50 mm length), made of acrylic glass, transparent

160 x 125 x 107 mm 50.00.06.22

Top view

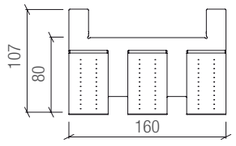

Side view

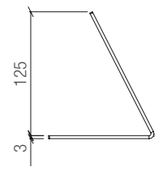

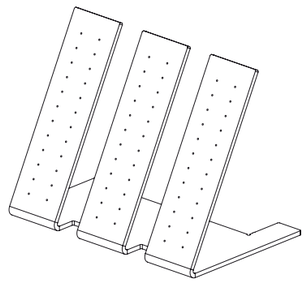

16
Display for 36 pairs of stud earrings, made of acrylic glass, transparent

160 x 125 x 107 mm 50.00.06.21

Top view

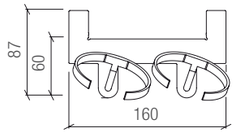

Side view

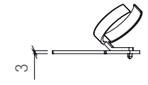

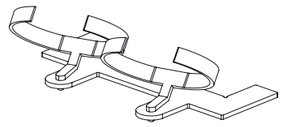

17
Display for 2 watches, made of acrylic glass, transparent, with clips for watches

160 x 3 x 87 mm 50.00.06.36

SLIDE

Fields of application

- OPTICS
- HEARING CARE
- WATCHES
- JEWELLERY
- ACCES-SORIES
- MOBILE PHONING

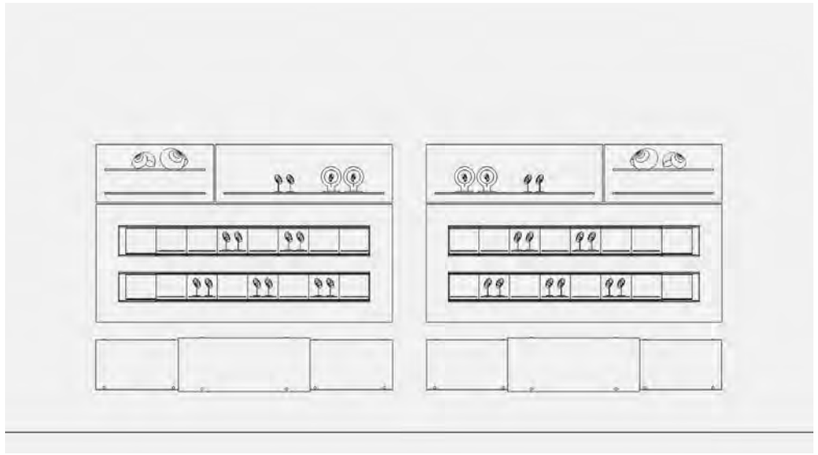

HEARING CARE

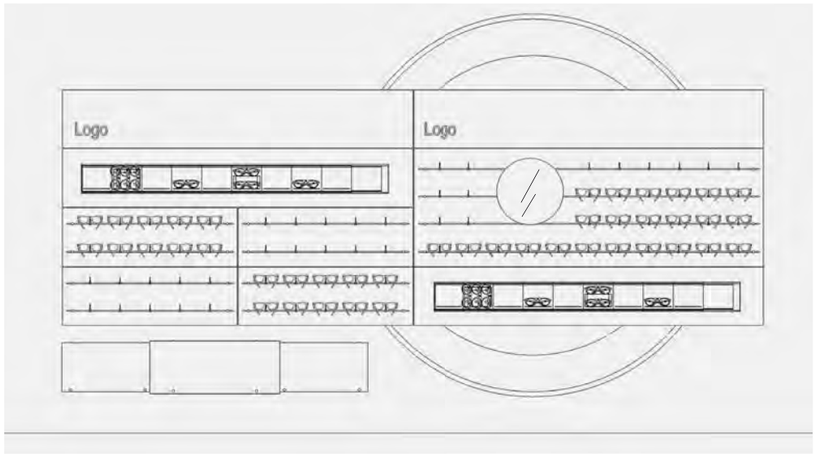

OPTICS

ACCESSORIES

III VERTICAL SYSTEMS

TUBIX CIRCO

Fields of application

OPTICS

SPORTS

LOCKING BARS DIS-
APPEAR COMPLETELY
WHEN OPENING

TUBIX CIRCO

INNOVATIVE LOCKING
SYSTEM WITH ROTATING
LOCKING BARS

PLENTY OF SPACE
FOR TAKING OUT THE
SPECTACLES COM FOR-
TABLY WITHOUT
SCRATCHING

TUBIX CIRCO

TUBIX CIRCO is an innovative, lockable presentation system with rotating locking bars. The benefit is: The locking bars disappear completely into the fine speed frame when opened, while the opening itself is enlarged to its maximum. This provides maximum comfort for the customer because spectacles can be selected and placed back quite easy and comfortable.

Rotative closing motion protects the merchandise from damage. Locking bar disappears completely when single rod opens.

Rounded plastic finish protects against scratching the frames and ensures a secure fit.

Plenty of space for taking off the spectacles comfortably

Fine speed frame

Detail front view

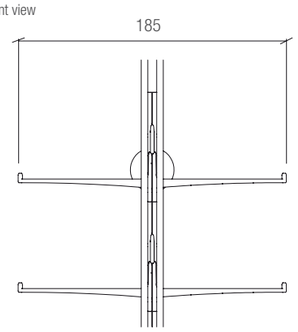

Detail side view

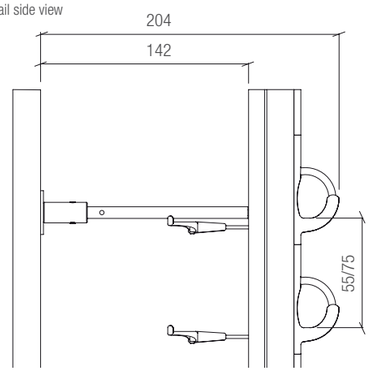

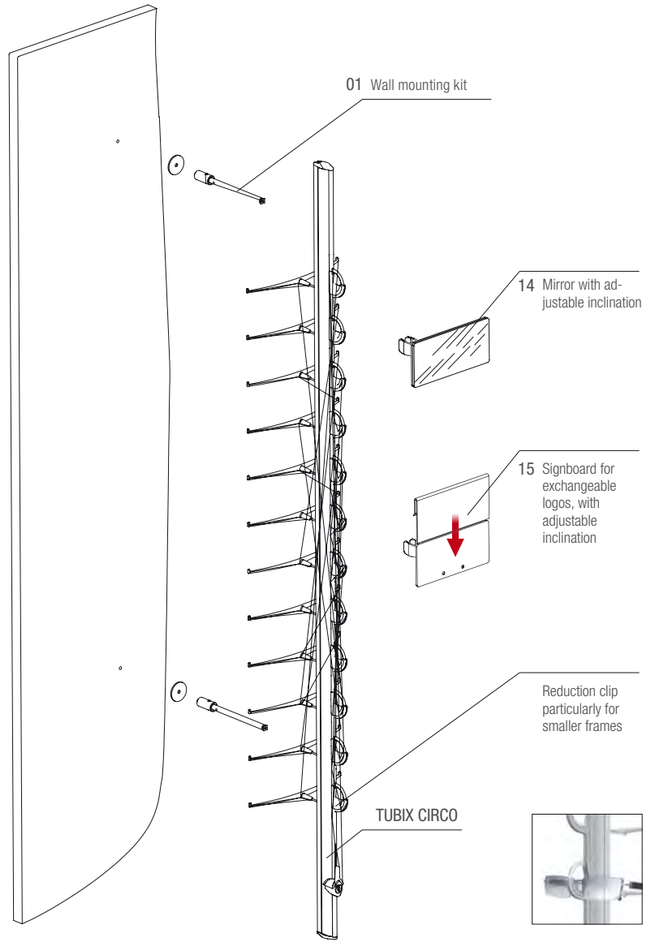

01. A

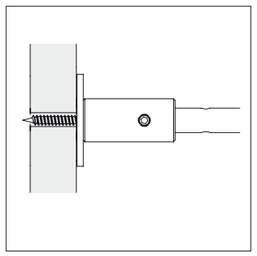

Mounting onto plasterboard/brickwork

01. B

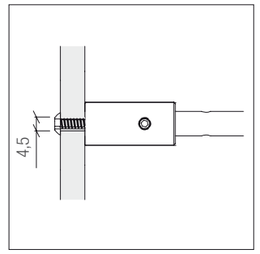

Mounting onto acrylic glass

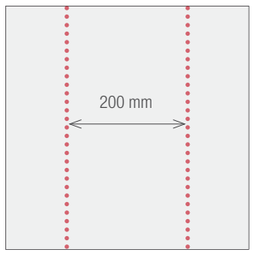

Recommended grid

TUBIX CIRCO

01
A.
Wall mounting kit, one pair, for mounting onto plasterboard/brickwork

Ø 30 x 140 mm 27.18.11.05

B.
Wall mounting kit, one pair, for mounting onto acrylic glass

Ø 14 x 138 mm 27.18.10.01

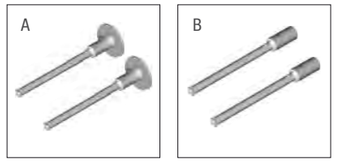

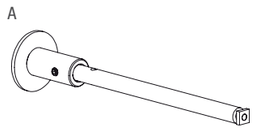

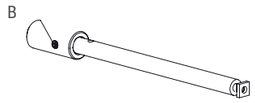

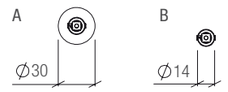

Front view

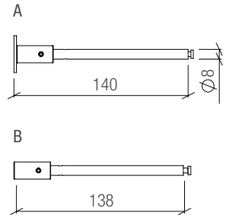

Side view

02
Adapter, one pair, for screwing onto wall mounting kit. Complete single rod is rotatable through adapter.

14 x 30 x 16 mm 27.18.09.00

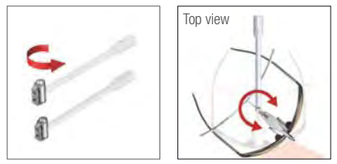

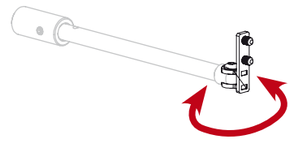

Front view

Side view

03
Customized colour variations
Starting from a quantity of 100 we can also manufacture powder coated TUBIX CIRCO single rods in individual colours.

On request

TC 12

TC 18

TC 24

Reduction clip particularly for smaller frames

Side view

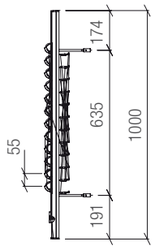

TC 12

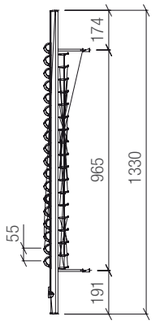

TC 18

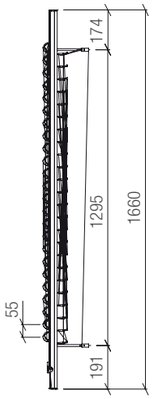

TC 24

Top view

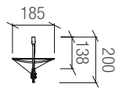

Side view

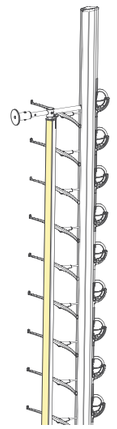

04
TUBIX CIRCO, single rod for spectacles, made of aluminium and plastics, open or lockable.
Distance between spectacles: 55 mm

TC 12
for 12 spectacles

Open	29.12.55.10/01
Mechanically lockable	29.12.55.11/01

TC 18
for 18 spectacles

Open	29.18.55.10/01
Mechanically lockable	29.18.55.11/01

TC 24
for 24 spectacles

Open	29.24.55.10/01
Mechanically lockable	29.24.55.11/01

Reduction clip, transparent plastic insert, particularly for smaller frames. Included in delivery.
29.00.00.10

05
GLOW LED lighting for

TC 12	29.60.00.04
TC 18	29.60.00.03
TC 12 H	29.60.00.01
TC 18 H	29.60.00.02
TC 24	29.60.00.02

TUBIX CIRCO

06
TUBIX CIRCO, single rod for spectacles, made of aluminium and plastics, open or lockable.
Distance between spectacles: 75 mm

TC 12 H
for 12 spectacles

Open 29.12.75.10/01

Mechanically lockable
29.12.75.11/01

TC 18 H
for 18 spectacles

Open 29.18.75.10/01

Mechanically lockable
29.18.75.11/01

Reduction clip, transparent plastic insert, particularly for smaller frames. Included in delivery.
29.00.00.10

Reduction clip particularly for smaller frames

TC 18 H

TC 12 H

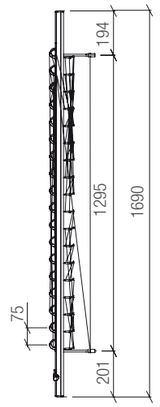

TC 18 H

Side view

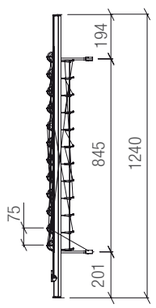

TC 12 H

Top view

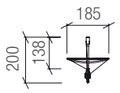

07
Battery charger, for rechargeable batteries

25.32.00.02

Rechargeable batteries AAA for single rods TUBIX CIRCO ELB (4 pieces, 1.2 V)

25.32.00.03

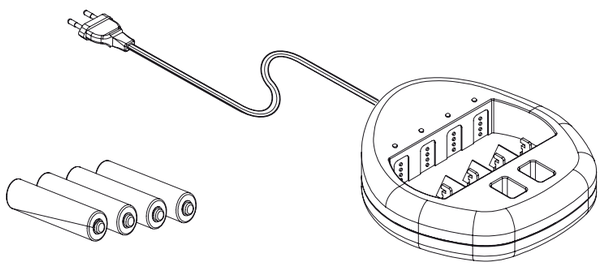

TC 12 H ELB

TC 18 H ELB

Reduction clip particularly for smaller frames

Side view

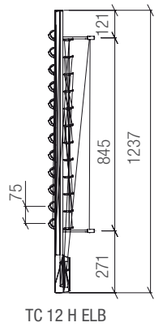

TC 12 H ELB

Top view

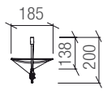

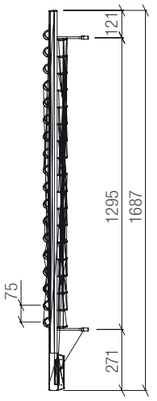

TC 18 H ELB

Top view

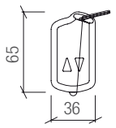

Front view

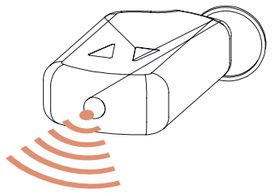

08
TUBIX CIRCO, single rods for spectacles, made of aluminium and plastics, electronically lockable with battery power
Distance between spectacles: 75 mm

for 12 spectacles
29.12.75.20/01

for 18 spectacles
29.18.75.20/01

Reduction clip, transparent plastic insert, particularly for smaller frames. Included in delivery.
29.00.00.10

09
Fernbedienung mit separaten Tasten zum Öffnen und S chließen
Remote control with separate push buttons for opening and locking

36 x 17 x 65 mm 25.30.00.03

TUBIX CIRCO

10
TUBIX CIRCO, single rods for spectacles, made of aluminium and plastics, electronically lockable with mains supply
Distance between spectacles: 75 mm

for 12 spectacles
29.12.75.30/01

for 18 spectacles
29.18.75.30/01

Reduction clip particularly for smaller frames

TC 18 H ELN

TC 12 H ELN

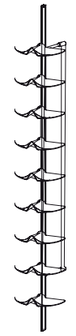

TC-SKI 9

TC-SKI 12

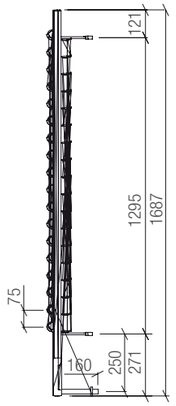

TC 18 H ELN

Side view

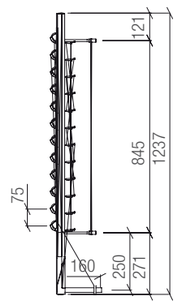

TC 12 H ELN

Top view

Side view

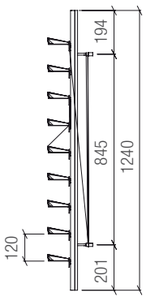

TC-SKI 9

Top view

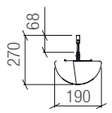

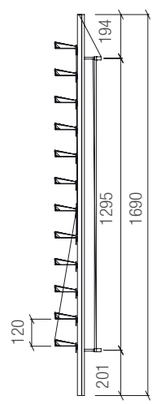

TC-SKI 12

12
TUBIX CIRCO SKI, single rod for ski goggles, made of aluminium and plastics, open.
Distance between ski goggles: 120 mm

TC-SKI 9
for 9 spectacles
29.50.09.00

TC-SKI 12
for 12 spectacles
29.50.12.00

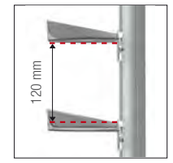

11
Controller unit, programmable, for single rods TUBIX CIRCO ELN including power supply
25.35.10.04

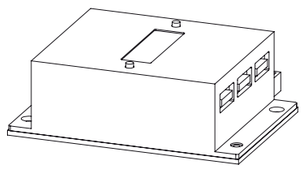

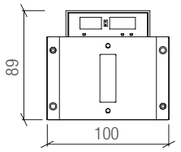

Top view

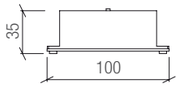

Front view

Side view

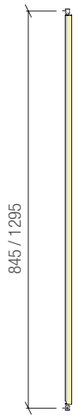

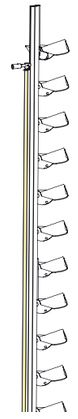

13
GLOW LED lighting for

TC-SKI 9 29.60.00.01

TC-SKI 12 29.60.00.02

TUBIX CIRCO

14

Mirror “Snap in”, inclination adjustable

130 x 70 x 107 mm 29.03.10.11

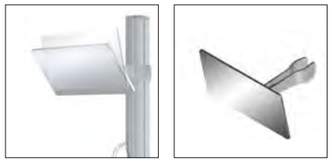

With adjustable inclination

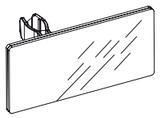

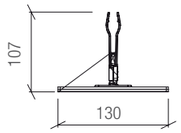

Top view

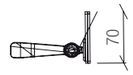

Side view

15

Signboard “Snap in”, made of acrylic glass, for exchangeable logos, inclination adjustable

150 x 70 x 107 mm 27.03.10.01

With adjustable inclination

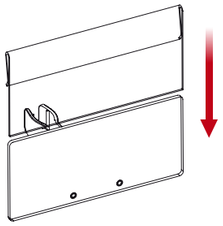

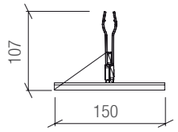

Top view

Side view

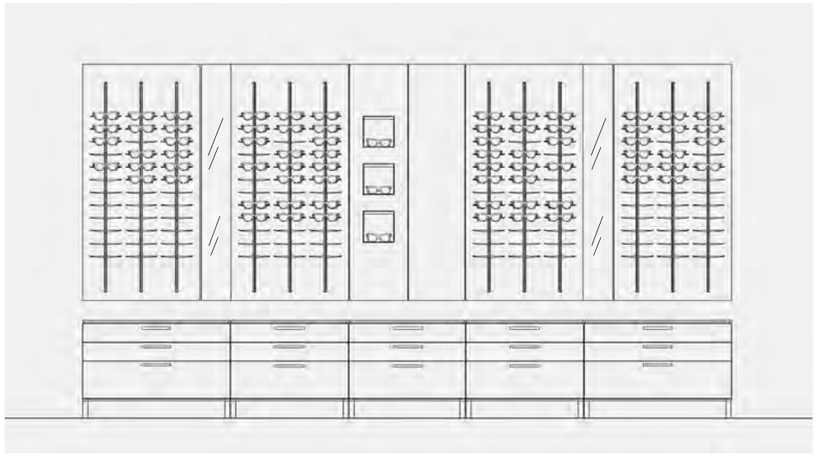

OPTICS

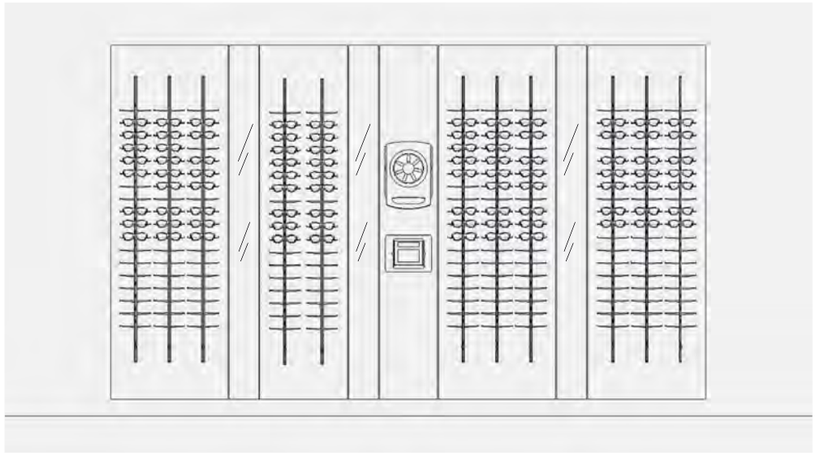

OPTICS SPORTS

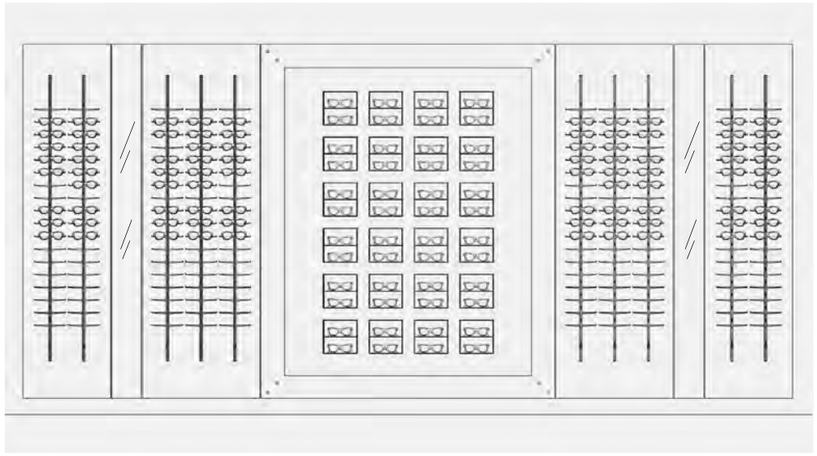

OPTICS

Fields of application

OPTICS

SPORTS

SCOPE SYSTEM

Fields of application

- OPTICS
- HEARING CARE
- WATCHES
- JEWELLERY
- FRAGRANCES + COSMETICS
- SHOES
- LEATHER GOODS
- CONSUMER ELECTRONICS
- MOBILE PHONING
- HEALTH CARE/ PHARMACY

WITH OUR SCOPE SYSTEM YOU ALWAYS CREATE NEW PRODUCT APPEARANCES

SCOPE

PRACTICAL HEIGHT ADJUSTMENT OF SINGLE ELEMENTS BY TELESCOPES

SCOPE SYSTEM CAN BE MOUNTED ON TOTHE CEILING, FLOOR AND SHOP WINDOW PLATFORMS

SCOPE SYSTEM

The innovative shop fitting system SCOPE offers maximum latitude for fitting and decorating shop windows or promotion areas. The system can be mounted onto the ceiling, floor and shop window platforms.
The adapter can be easily and safely bolted to a previous mounted rail system. Due to the wide range of mounting and practical elements of height adjustment of the individual telescopes, you can always create new pictures with this system.

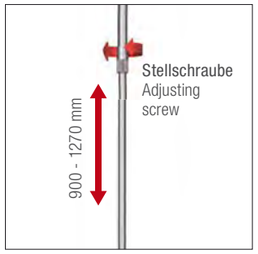

Height adjustment for flexible decoration

Direct fixation by screws

Fixation by using mounting rail

■ SCOPE SYSTEM can be combined with P.O.S. SYSTEM

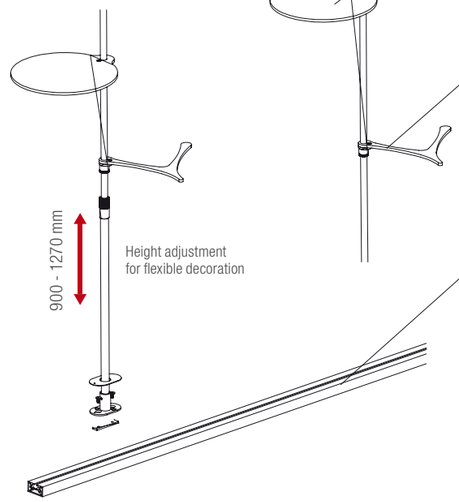

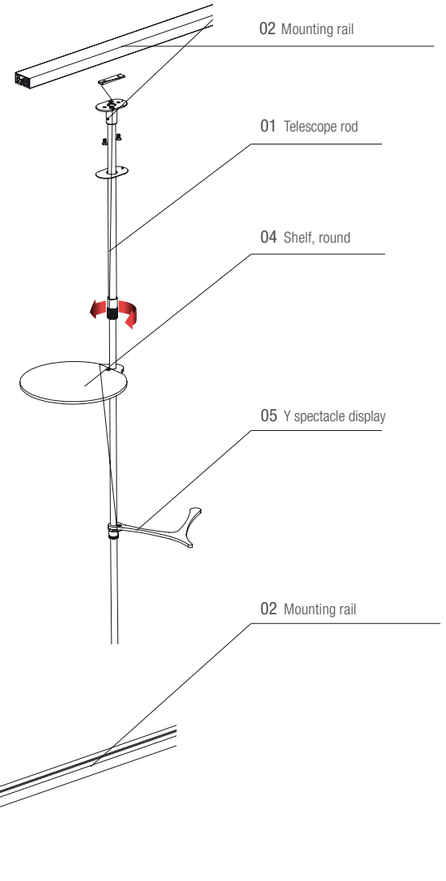

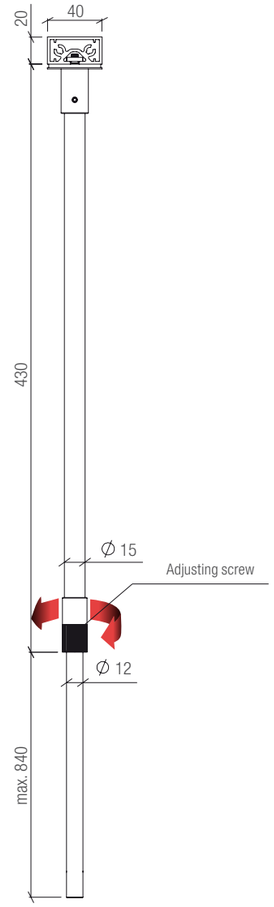

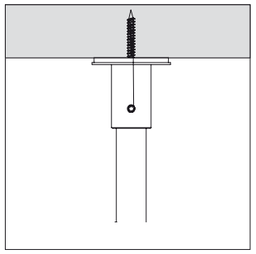

Direct fixation by screws

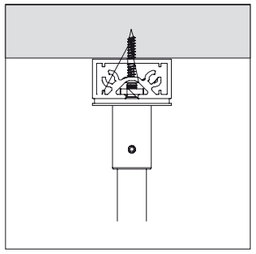

Fixation by using mounting rail

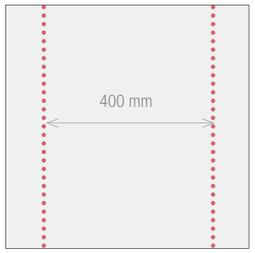

Recommended grid

SCOPE SYSTEM

01

Telescope rod, brushed stainless steel

Length
900 - 1270 mm 22.00.00.01/01

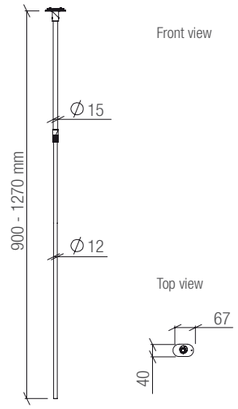

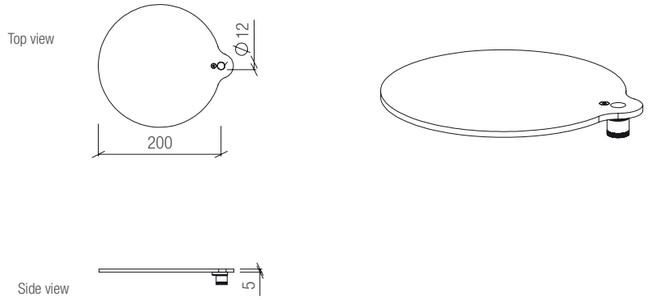

04

Shelf, round, made of acrylic glass, dual-satin, including adapter

Ø 200 mm 22.00.00.03/01

02

Mounting rail for telescope rod, silver coloured anodized speed frame, cut by measure, sold by metre

max. 6000 x 40 x 20 mm 22.00.00.00

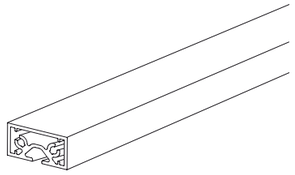

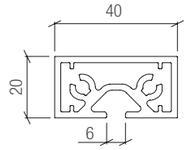

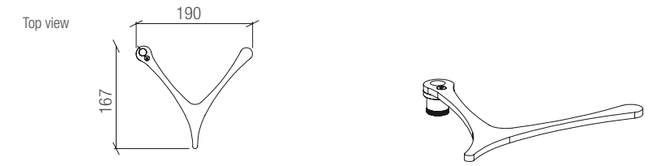

05

Y spectacle display made of acrylic glass, dualsatin, including adapter

190 x 5 x 167 mm 22.00.00.04/01

03

Show case made of acrylic glass, transparent, including adapter

210 x 210 x 210 mm 22.00.00.06/01

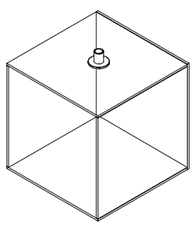

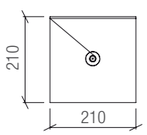

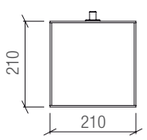

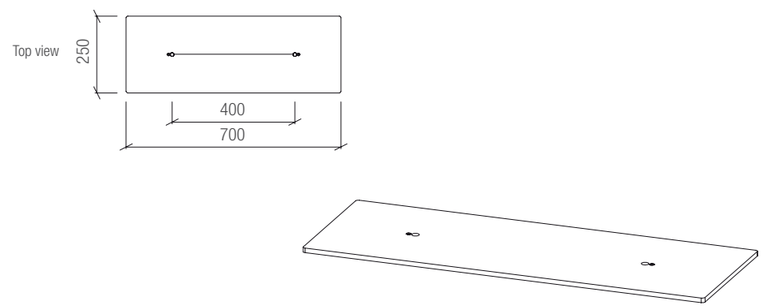

06

Rectangular shelf made of acrylic glass, dualsatin, including adapter

700 x 8 x 250 mm 22.00.00.05/01

SCOPE SYSTEM

07
Spectacle tray for 6 spectacles made of acryilc glass, glossy white, with racks made of acrylic glass, transparent, including adapter

500 x 200 x 30 mm 22.00.00.07/01

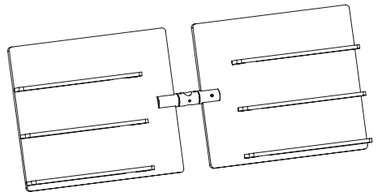

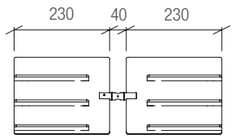

Top view

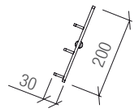

Side view

08

Poster panel DIN A3 made of acrylic glass, transparent, with fixing bar made of silver coloured powder-coated steel, including adapter

300 x 450 x 15 mm 22.00.00.02/01

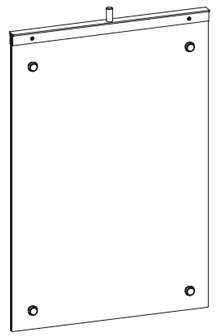

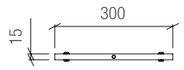

Top view

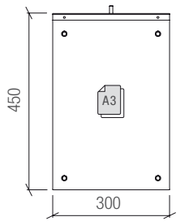

Front view

09

Poster panel DIN A3 made of acrylic glass, transparent, with shelf made of acrylic glass, dualsatin, and fixing bar made of silver coloured powder-coated steel, including adapter

300 x 450 x 200 mm 22.00.00.14

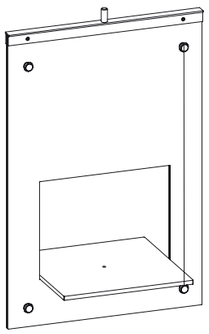

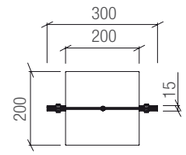

Top view

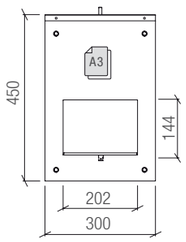

Front view

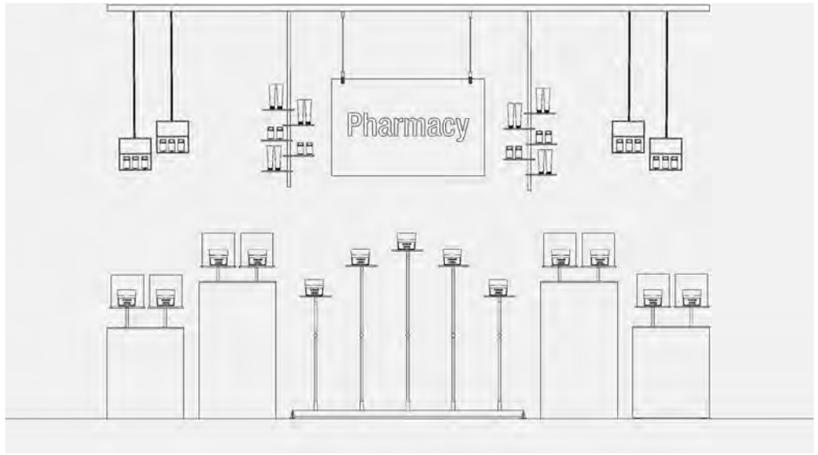

HEALTH CARE / PHAR MACY

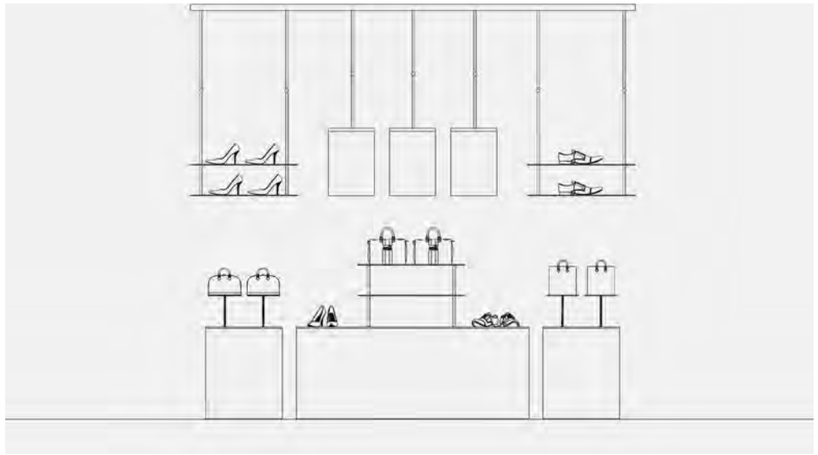

SHOES BAGS

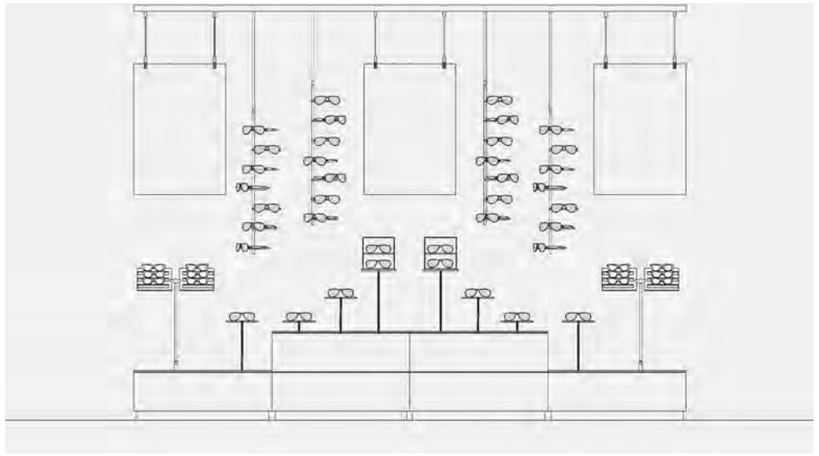

OPTICS

Fields of application

- OPTICS
- HEARING CARE
- WATCHES
- JEWELLERY
- FRAGRANCES + COSMETICS
- SHOES
- LEATHER GOODS
- CONSUMER ELECTRONICS
- MOBILE PHONING
- HEALTH CARE/ PHARMACY

ARRAY SYSTEM

Fields of application

- OPTICS
- HEARING CARE
- WATCHES
- JEWELLERY
- FRAGRANCES + COSMETICS
- SHOES
- ACCES-SORIES

ARRAY

FLEXIBLE DECORA-TION SYSTEM FOR SHOP WINDOWS

DUE TO THE INTRICATE CONSTRUCTION, THE GOODS WILL BE PRESENTED OPTI-MALLY TO THE FORE

ARRAY SYSTEM

The flexible decoration system for shop windows can be attached directly or by using mounting rails. Individual components can be mounted onto it in any quantity and position. Countless formations result from easy re-arrangement of the decorative balls without a necessary change of the basic construction. Due to the filigree construction, the goods will be presented optimally to the fore.

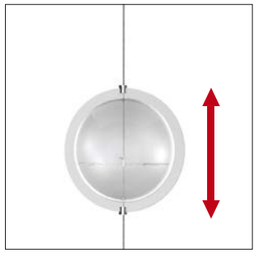

Continuously adjustable in height

Direct fixation by screws

Fixation by using mounting rail

■ Countless formations & intricate construction

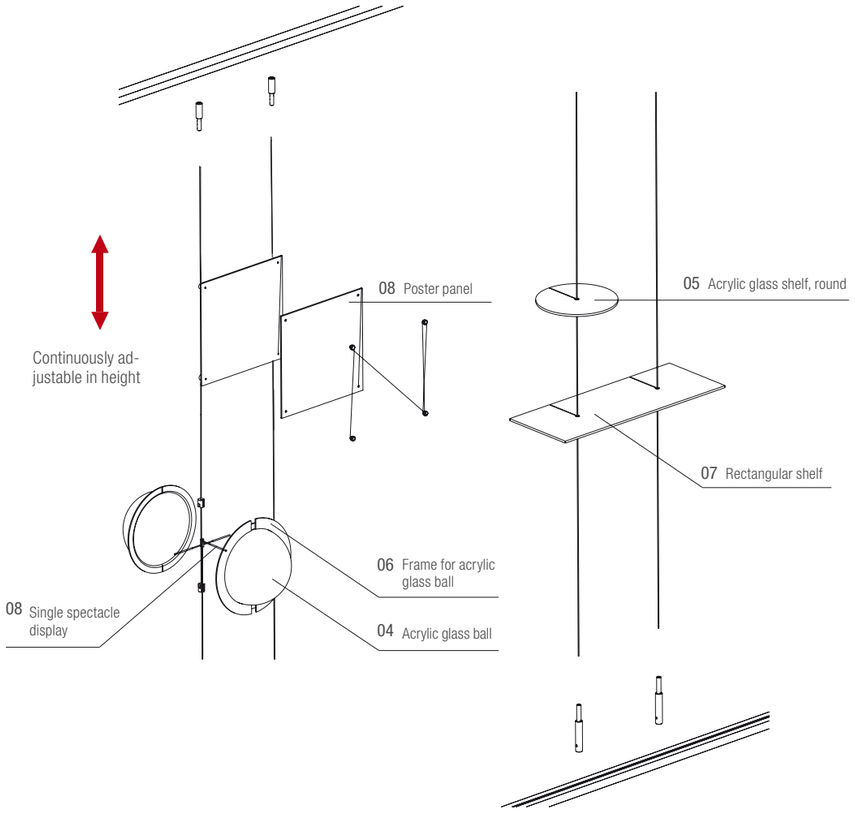

Detail cross section

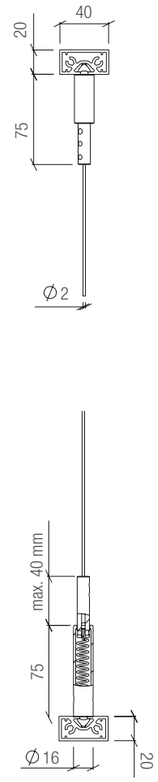

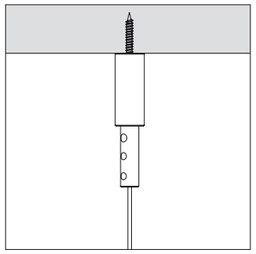

Direct fixation by screws

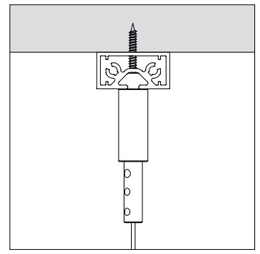

Fixation by using mounting rail

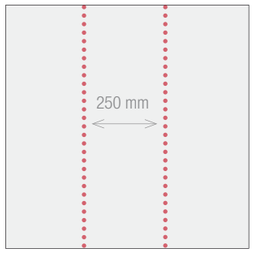

Recommended grid

ARRAY SYSTEM

01

Mounting set including fixation for mounting between floor and ceiling

Length
3500 mm 26.00.00.02

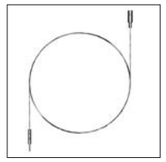

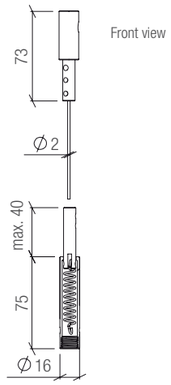

02

Mounting rail for ARRAY SYSTEM, silver-coloured anodized speed frame, cut by measure, sold by metre

max. 6000 x 40 x 20 mm 22.00.00.00

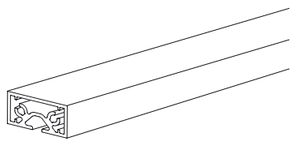

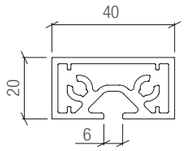

03

Single spectacle display, made of nickel-plated steel

190 x 90 mm 26.00.00.06/01

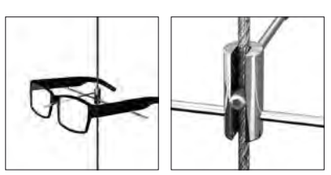

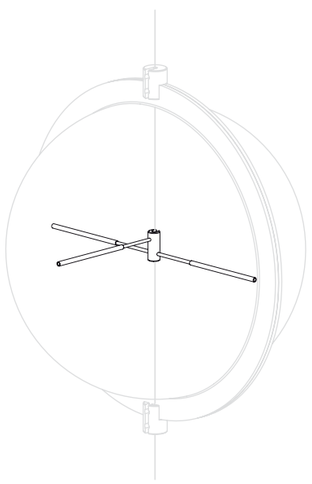

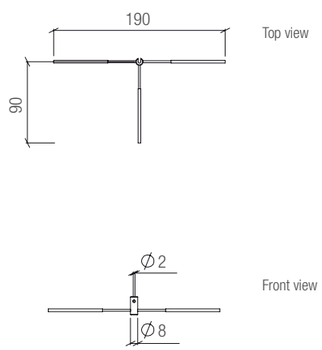

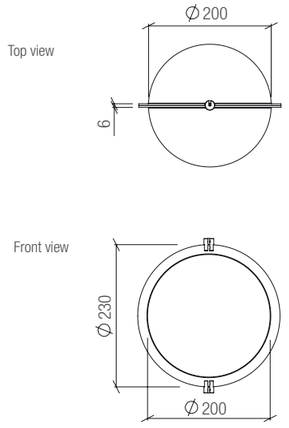

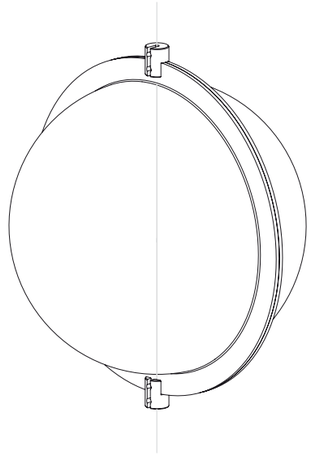

04

Acrylic glass ball, two-shelled. Individual fitting. Please order separately.

Note: Back shell optionally also available in different lacquer colours.

Ø 230 mm 26.00.00.11

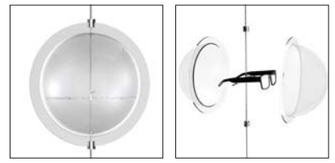

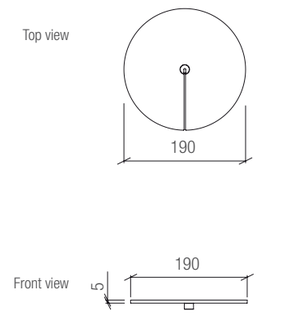

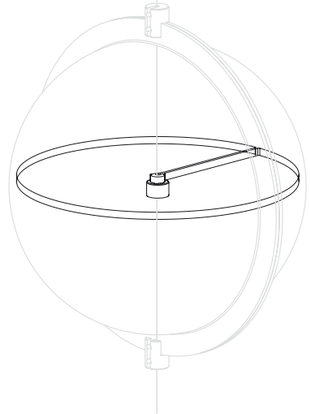

05

Acrylic glass shelf, round, dualsatin, including adapter

Ø 190 mm 26.00.00.04/01

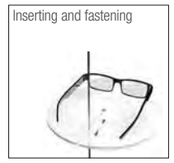

06

Frame for acrylic glass ball, glossy white or glossy black

Ø 255 mm 26.00.00.08

Note: Further colours on request.

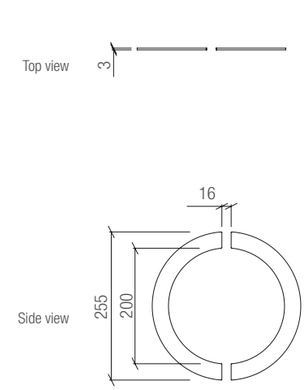

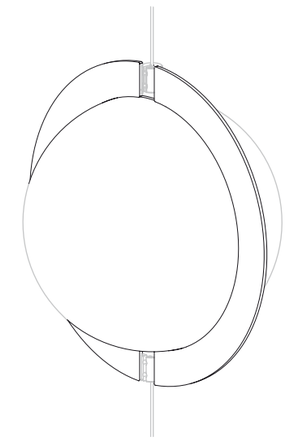

ARRAY SYSTEM

07
Rectangular shelf made of acrylic glass, dualsatin, including adapter

500 x 5 x 190 mm 26.00.00.09

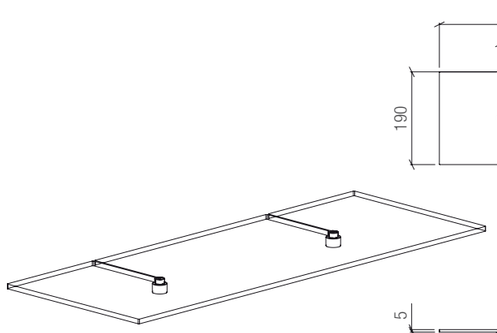

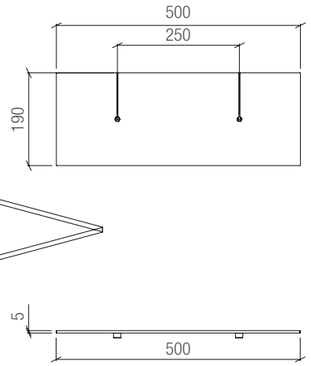

Top view

Front view

08
Poster panel for exchangeable posters (for 2x mounting set), without poster

280 x 280 x 6 mm 26.00.00.03

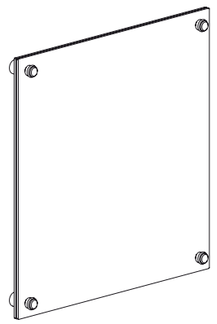

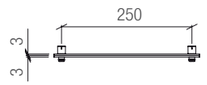

Top view

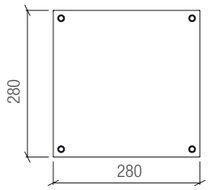

Front view

09
Bent shelf (U-shape) made of acrylic glass, dualsatin, including adapter

200 x 200 x 200 mm 26.00.00.10

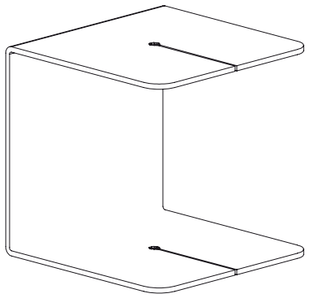

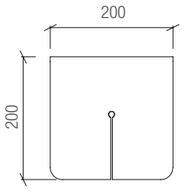

Top view

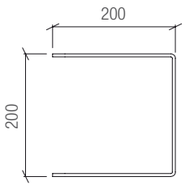

Side view

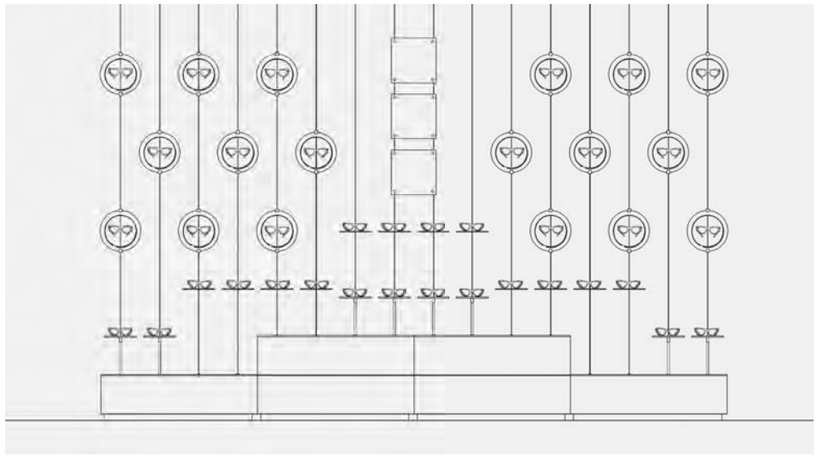

OPTICS

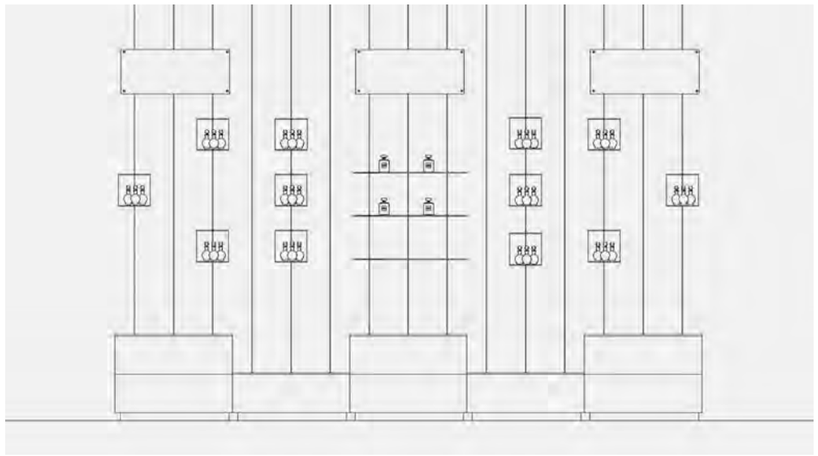

FRAGRANCES + COSMETICS

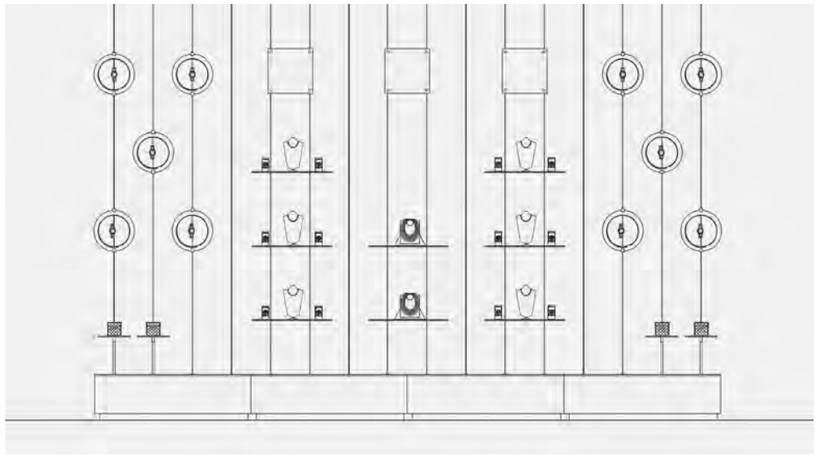

WATCHES JEWELLERY

Fields of application

- OPTICS
- HEARING CARE
- WATCHES
- JEWELLERY
- FRAGRANCES + COSMETICS
- SHOES
- ACCESSORIES

VARIO [S] & VARIO [LS]

Fields of application

- OPTICS
- ACCES-SORIES
- BLISTER
- SPORTS
- HEALTH CARE/ PHARMACY

A SIMPLE IN-LINE BORE-HOLING PROVIDES THE BASIS FOR EQUIPPING WITH VERSATILE PRO-DUCT CARRIERS OF OUR VARIO[LS] SYSTEM

VARIO [S]
VARIO [LS]

FLEXIBLE ARRANGE-MENT OF DIFFERENT PRODUCT CARRIERS

VARIO[S]IS BASED ON ANARROW SPEED FRAME, EMBEDDED INTO A WOODEN PANEL: THE PRODUCT CARRIERS ARE SIMPLY SNAPPED IN

VARIO [S]

VARIO [S] is based on a narrow speed frame, which is embedded vertically into a wooden panel. The system components are snapped into the rail at the favoured spot. By means of a flexible arrangement and a selection of different accessories, versatile scopes for design develop.

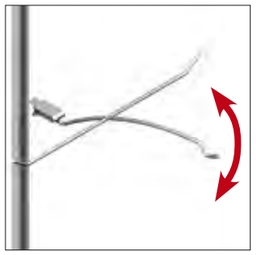

System components can be fixed easily

Components can be adjusted along the rail

For wooden panels

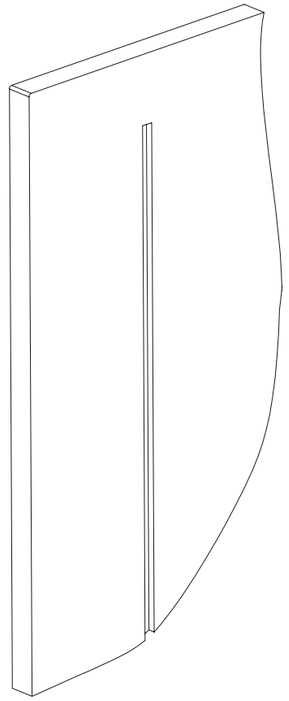

■ Clearly structured display area

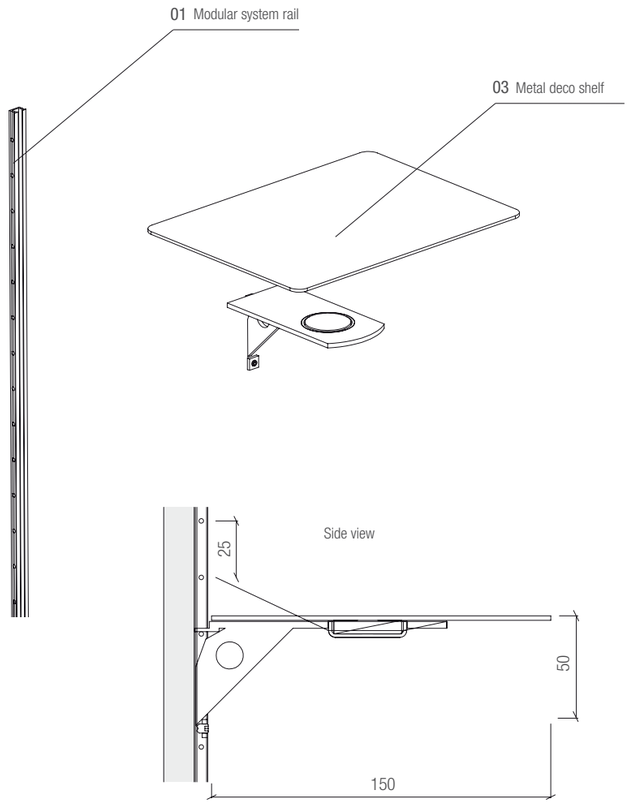

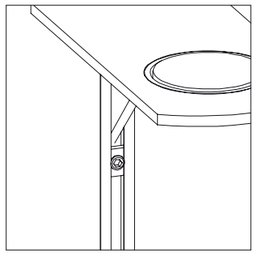

Including additional locking

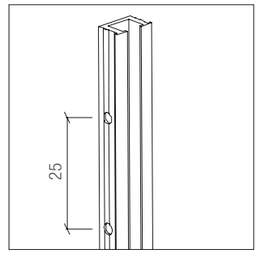

Grid distance

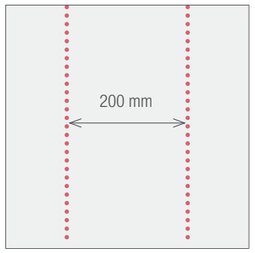

Recommended grid

01

Modular system rail (without back panel)

2500 x 8,5 x 6 mm 13.01.10.06

Note: The dimensions of the rails are subjected to tolerances. Please only mill the groove when the original rod is available to you!

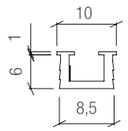

Top view

02

BSC Single spectacle display, nickel-plated

180 x 50 x 170 mm 14.01.00.02

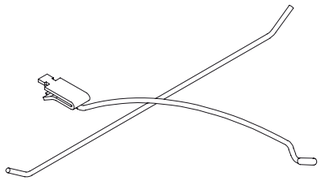

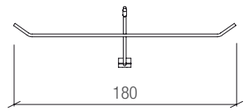

Front view

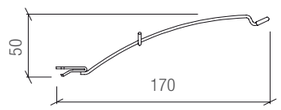

Side view

03

Metal deco shelf, made of metal, including support

A. Rectangular
200 x 150 x 2 mm 17.01.11.02

B. Round
180 x 152 x 2 mm 17.02.11.02

max. 1 kg

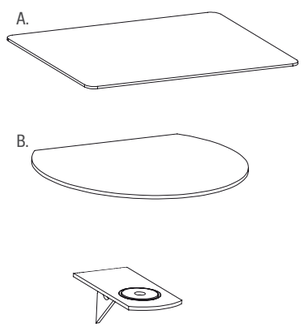

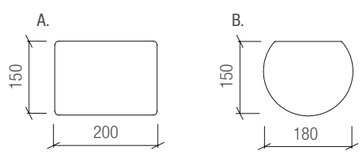

Front view

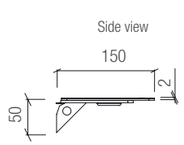

Side view

Front view

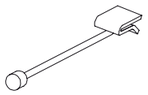

Side view

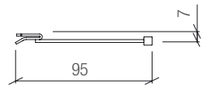

Front view

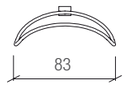

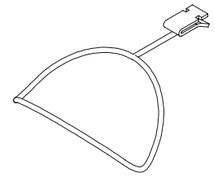

Side view

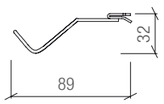

Front view

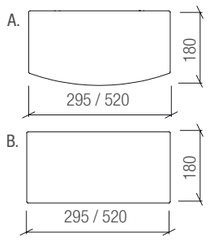

Side view

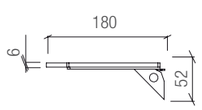

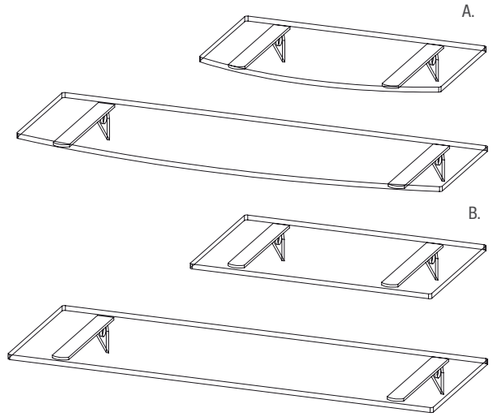

04

BSC display for blister pack, nickel-plated

10 x 7 x 95 mm 14.01.00.03

max. 0,5 kg

05

BSC spectacle case display, nickel-plated

83 x 32 x 89 mm 19.11.30.02

06

Glass shelf, including support

A. Rectangular
295 x 180 x 6 mm 17.11.30.02
520 x 180 x 6 mm 17.11.52.02

B. Rounded
295 x 180 x 6 mm 17.11.30.01
520 x 180 x 6 mm 17.11.52.01

max. 2 kg

VARIO [LS]

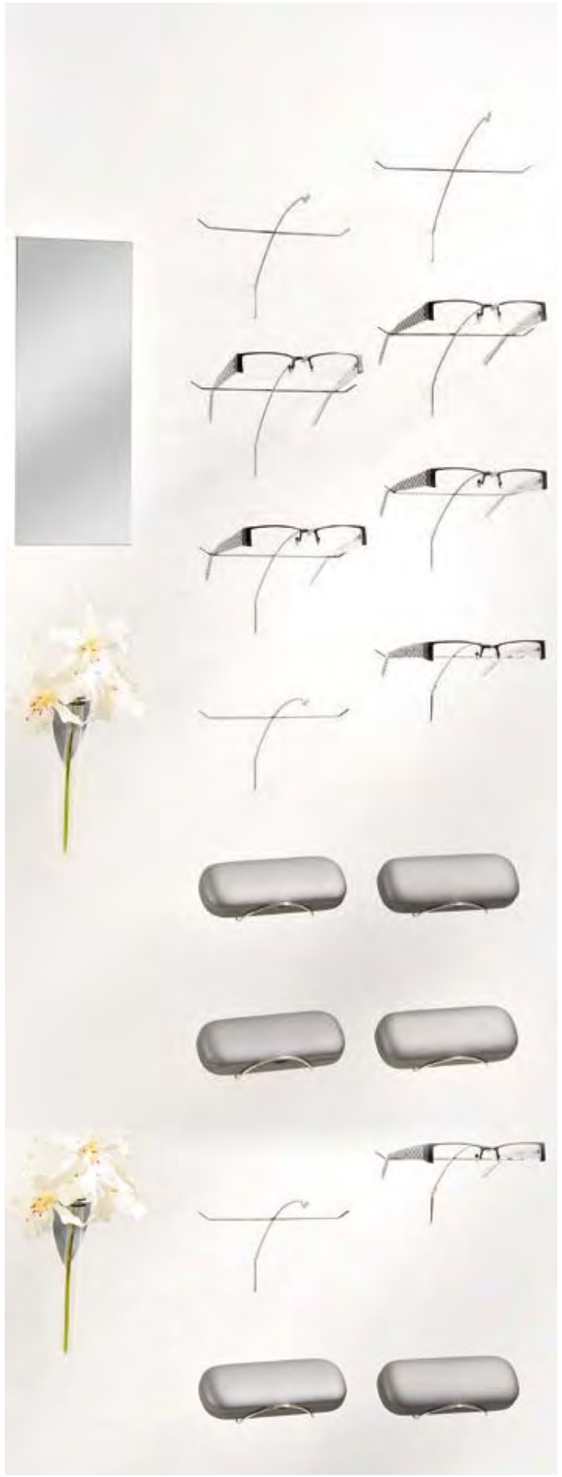

Well-tried and up-to-date though: VARIO [LS] has been convincing for many years by its subtle design and its flexibility. A simple in-line boreholing provides the basis for equipping with versatile system components. The particular of this system: with VARIO SIDE, a spectacle holder which can be turned through 45°, eye-catching and shapely temples can be displayed in an optimal way.

Insertion of the product carrier into the boreholing

Swivelling VARIO SIDE single spectacle display

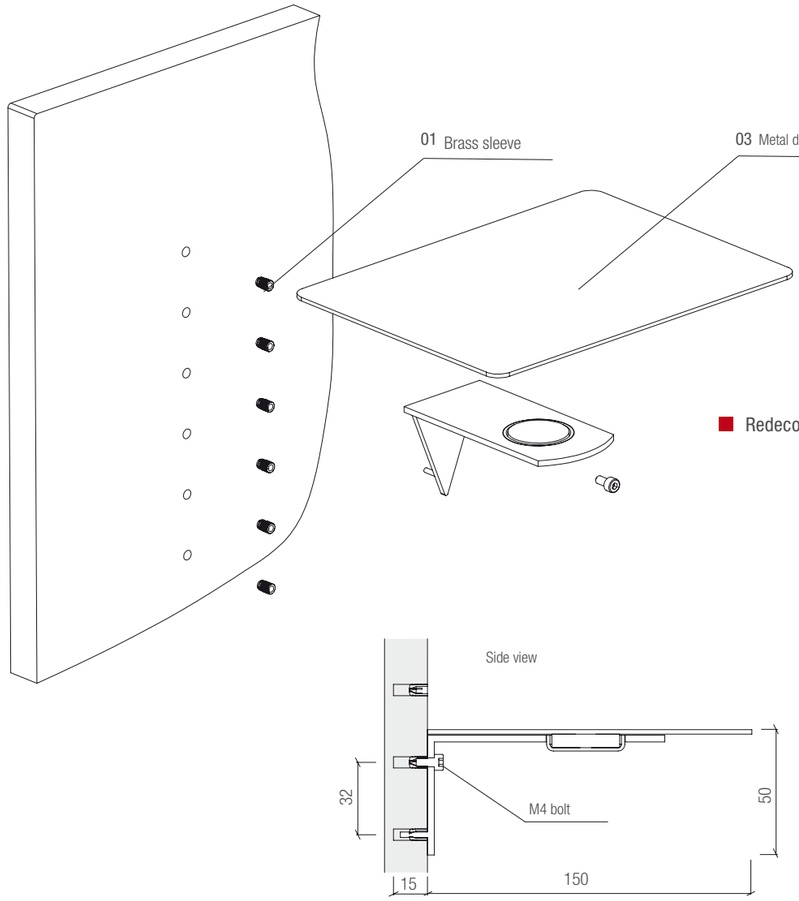

■ Redecoration within seconds

In combination with wooden panels

The rectilinear holes are drilled with intervals of 32 mm. Sleeves are glued into the holes (2,2 mm) to prevent them from tearing and furthermore to provide additional support for product carriers

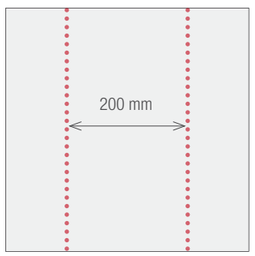

Recommended grid

VARIO [LS]

01

Brass sleeve, for different wooden panels

Ø 5 x 8 mm 20.01.08.03

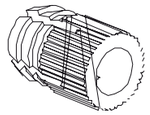

Front view

Side view

02

BLC single spectacle display, nickel-plated

180 x 80 x 162 mm 14.04.00.02

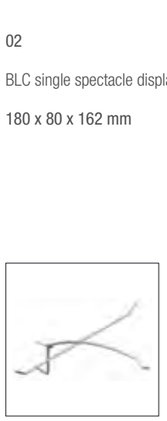

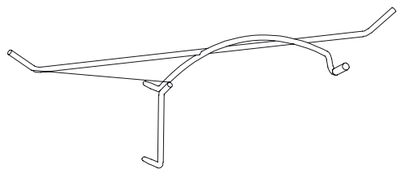

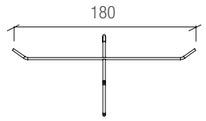

Front view

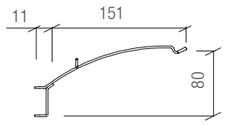

Side view

03

Metal deco shelf, made of metal, including support

A. Rectangular
200 x 150 x 2 mm 17.01.44.02

B. Round
180 x 152 x 2 mm 17.02.44.02

max. 1 kg

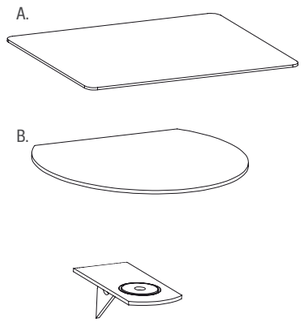

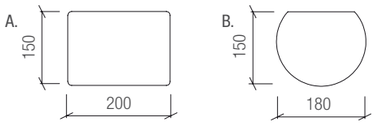

Front view

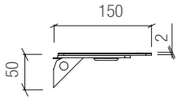

Side view

Front view

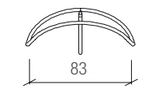

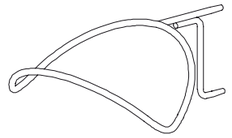

Side view

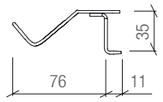

Front view

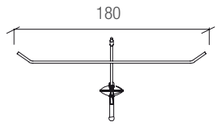

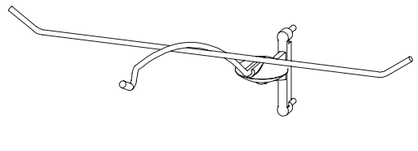

Side view

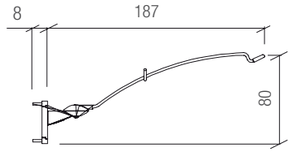

Front view

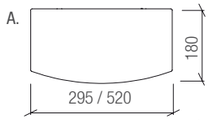

Side view

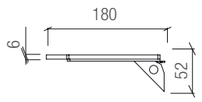

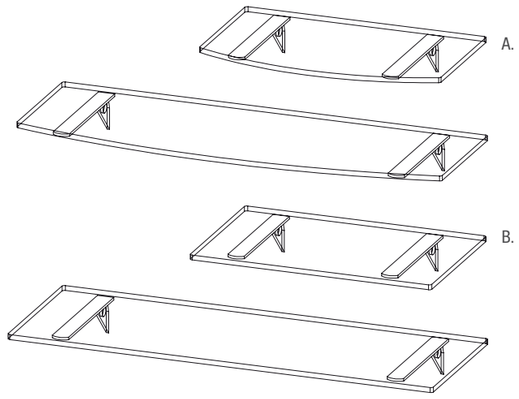

04

BLC spectacle case display, nickel-plated

83 x 35 x 87 mm 19.44.30.02

05

VARIO SIDE single spectacle display, nickel-plated

180 x 80 x 187 mm 14.12.00.02

06

Glass shelf, including support

A. Rectangular
295 x 180 x 6 mm 17.44.30.02
520 x 180 x 6 mm 17.44.52.02

B. Rounded
295 x 180 x 6 mm 17.44.30.01
520 x 180 x 6 mm 17.44.52.01

max. 2 kg

VARIO [S] & VARIO [LS]

Fields of application

- OPTICS
- ACCES-SORIES
- BLISTER
- SPORTS
- HEALTH CARE/ PHARMACY

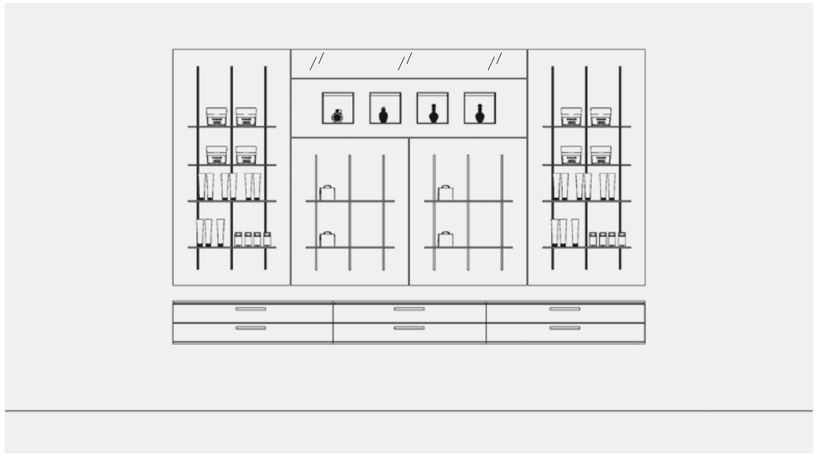

HEALTH CARE / PHARMACY

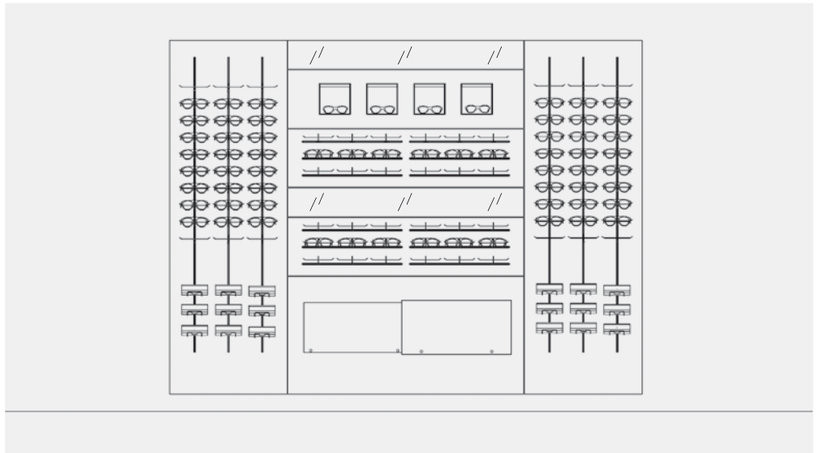

OPTICS

OPTICS SPORTS

SELECTIVE SYSTEMS

LIGHT BOX & LED CUBE

Fields of application

- OPTICS
- HEARING CARE
- WATCHES
- JEWELLERY
- FRAGRANCES + COSMETICS
- LEATHER GOODS
- ACCES-SORIES
- MOBILE PHONING

LED

ENERGY EFFICIENCY,
LONG LIFE AND
TRUE COLOUR
REPRODUCTION

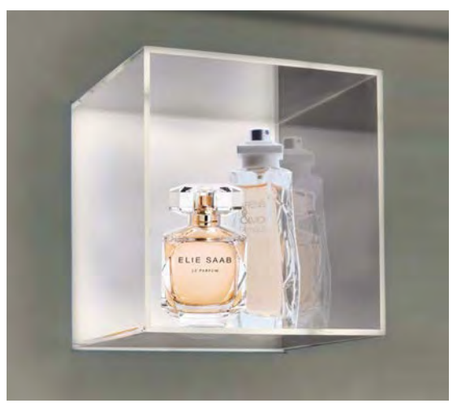

WITH OUR LED SHOWCASES THE
GOODS WILL BE HIGHLIGHTED PERFECTLY

LIGHT BOX

Nowadays, the LED technology is a fully integrated part in the business of forward-looking shop fitting. The clear benefits are energy efficiency, long life and true colour reproduction.

LIGHT BOX with
LED illumination, above

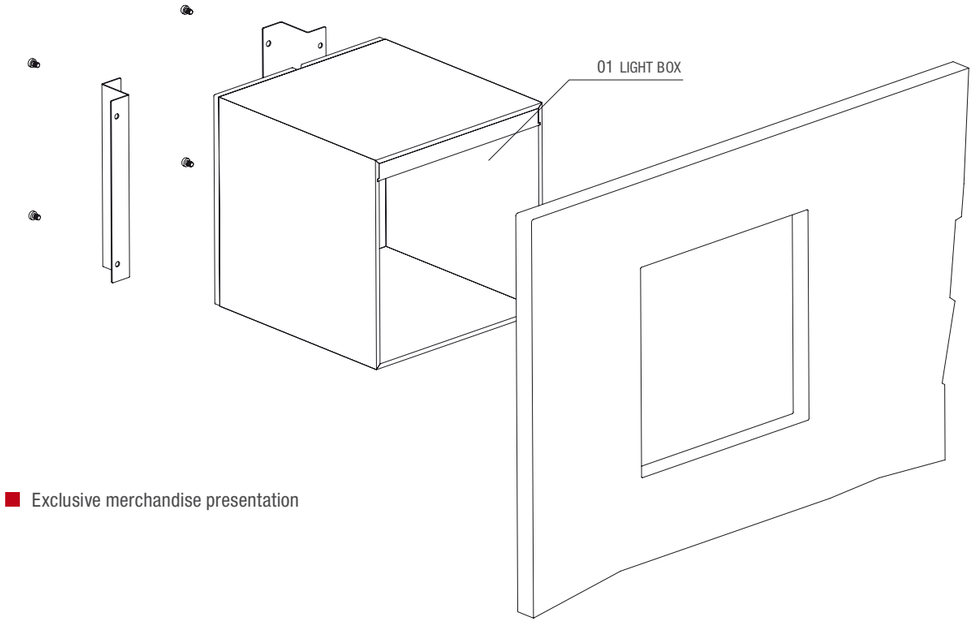

■ Exclusive merchandise presentation

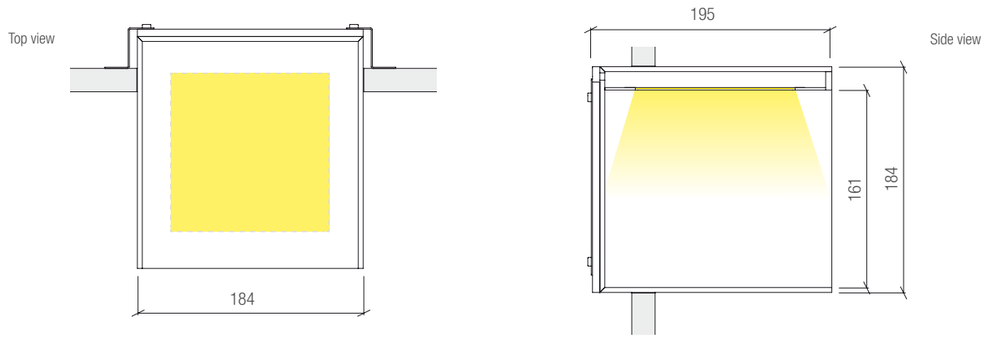

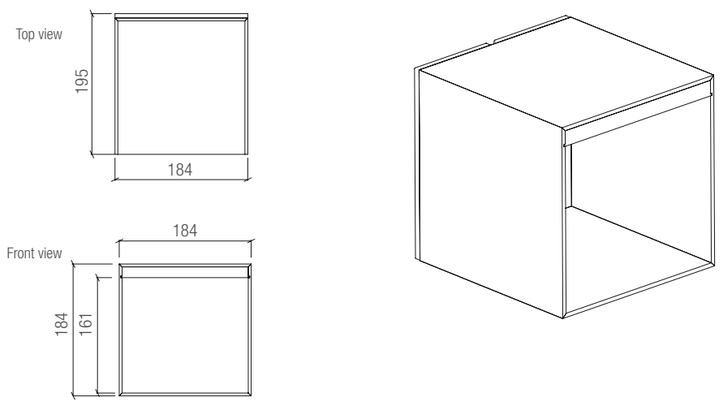

01

LIGHT BOX made of acrylic glass, glossy white, with integrated LED illumination on the ceiling field. Including wall mounting kit and power supply.

184 x 184 x 195 mm M2/55.00.00.04

LED CUBE

Due to our LED CUBE with integrated LED illumination your goods will be highlighted perfectly. Thanks to many possible combinations innovative and attractive product presentations can be created.

LED CUBE with
LED illumination, from the back

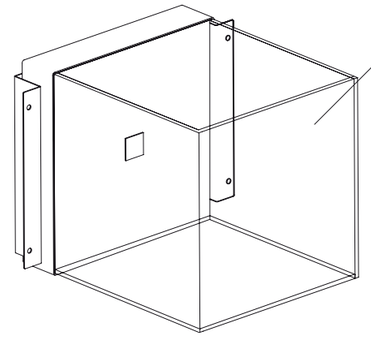

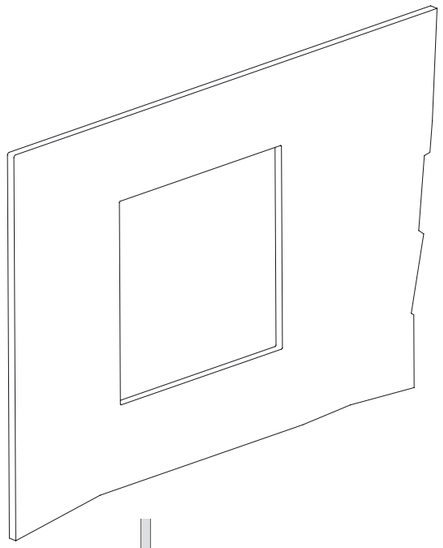

■ Integrated L ED illumination

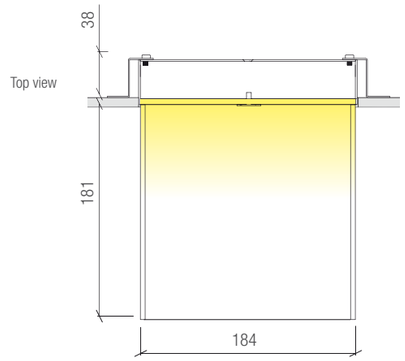

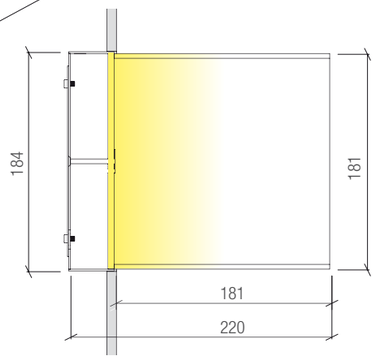

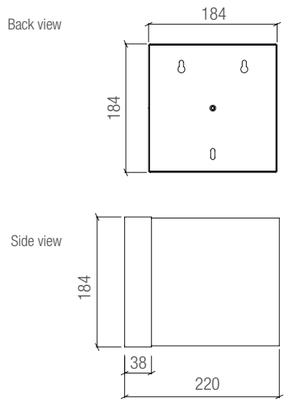

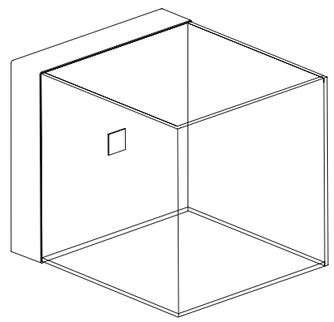

01
LED CUBE made of acrylic glass, transparent, with integrated LED illumination on the back panel. Including wall mounting kit.

184 x 184 x 220 mm M2/55.00.00.00

LED CUBE & MONO WALL

With the lockable single spectacle display MONO it is possible to secure and unlock single spectacles separately. Combined with LED CUBE it is especially suitable for high quality frames.

LED CUBE & MONO WALL with LED illumination, from the back

Mode of operation

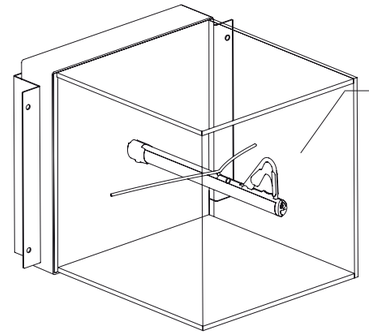

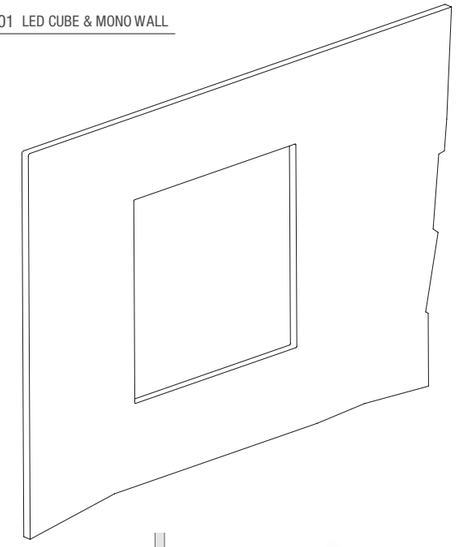

■ Lockable spectacle display

Top view

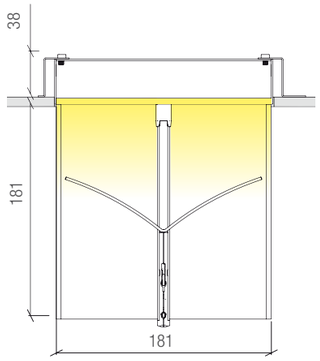

Side view

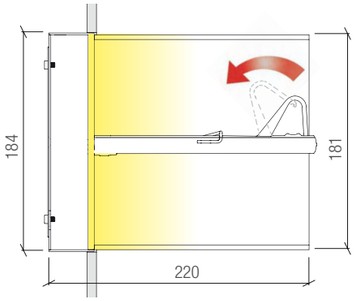

Back view

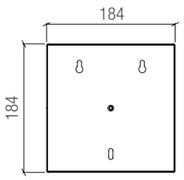

Side view

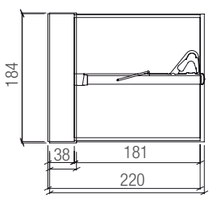

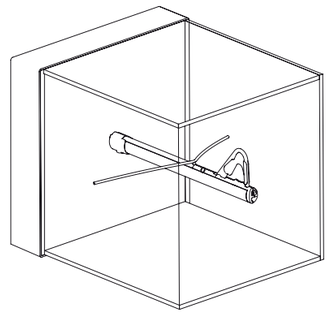

01

LED CUBE made of acrylic glass, transpa rent, with integrated LED illumination on the back panel. Including MONO WALL single spectacle display, lockable, with support and wall mounting kit.

184 x 184 x 220 mm M2/55.00.00.01

LIGHT BOX & LED CUBE

Fields of application

- OPTICS]
- HEARING CARE
- WATCHES
- JEWELLERY
- FRAGRANCES + COSMETICS
- LEATHER GOODS
- ACCES-SORIES
- MOBILE PHONING

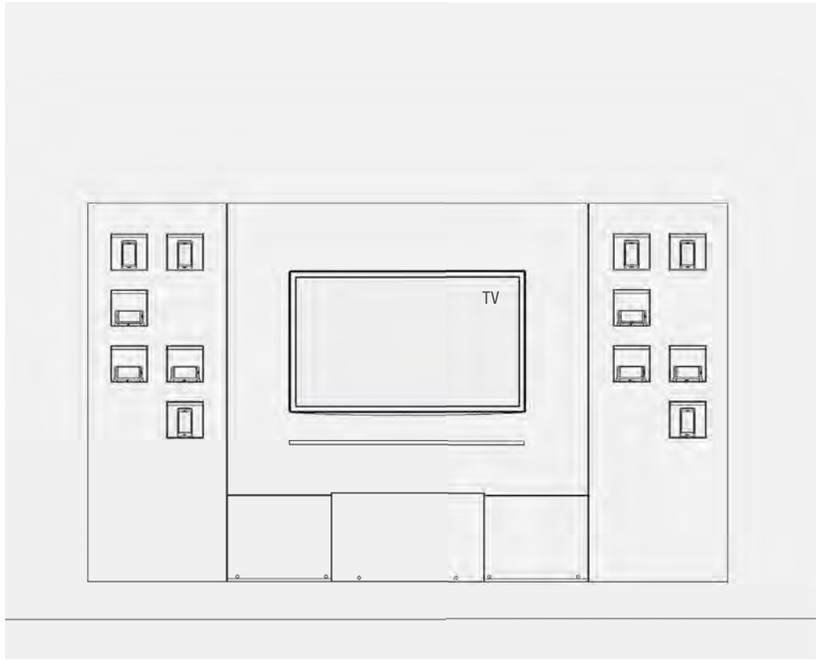

CONSUMER ELECTRONICS MOBILE PHONING

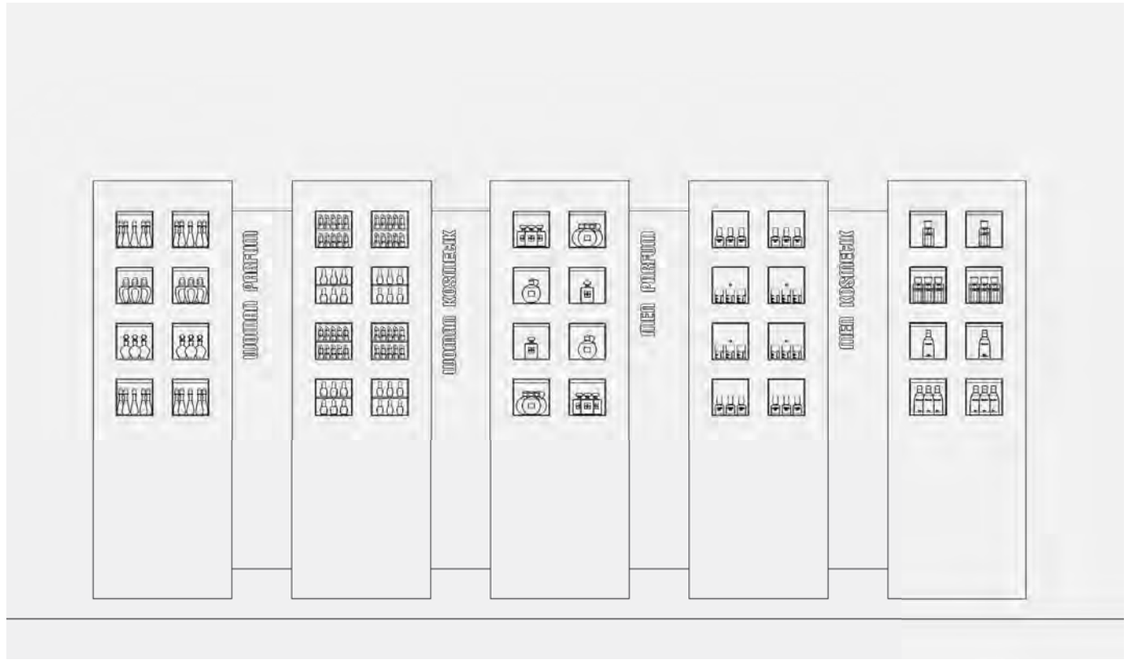

FRAGRANCES + COSMETICS

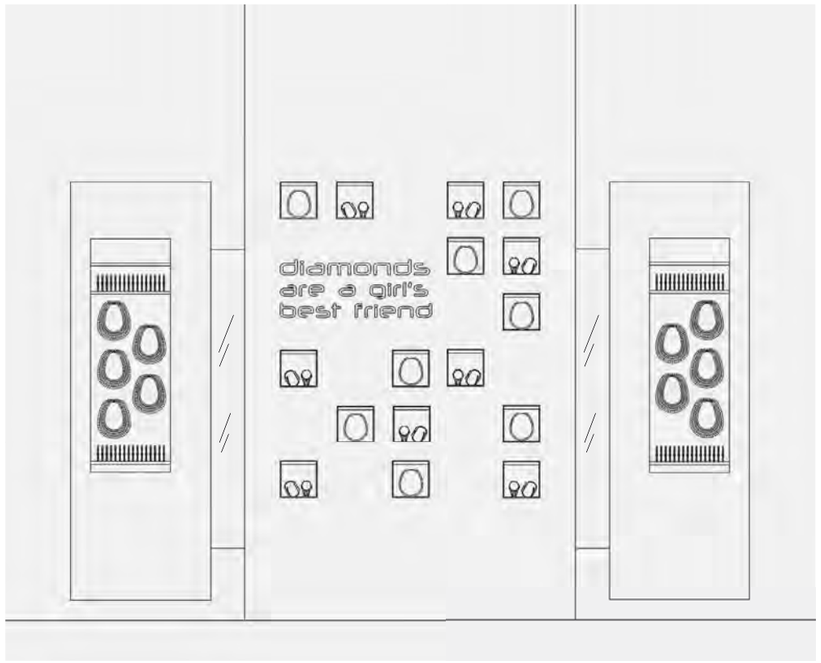

WATCHES JEWELLERY

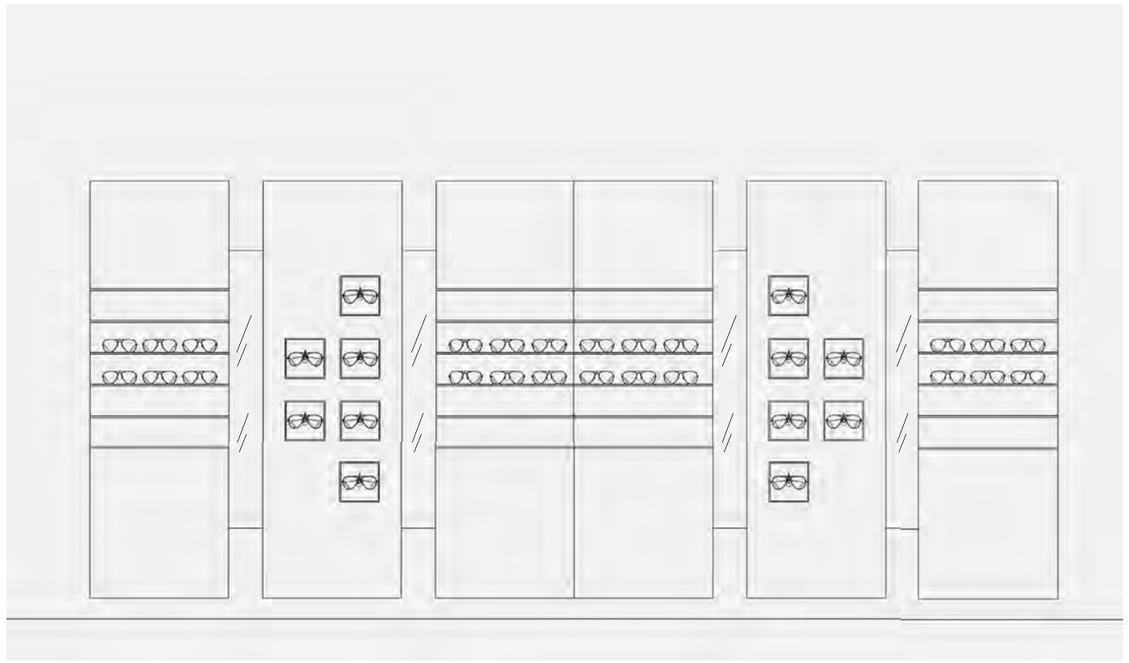

OPTICS

MONO & PIN

Fields of applications

- OPTICS
- SPORTS

MONO OFFERS
SEPARATE SECURITY
FOR SINGLE FRAMES

MONO

LOCKABLE SINGLE
SPECTACLED ISPLAY

PIN

SMART SOLUTION
FOR PERFORATED
PANELS

PIN IS IDEAL FOR A CLEAR AND
INEXPENSIVE MERCHANDISE
PRESENTATION

MONO WALL

With the lockable single spectacle display MONO WALL it is possible to secure and unlock single spectacles separately. Hence, MONO WALL is particularly suitable for high-quality frames and can be mounted directly on brickwork as well as on panels.

Single spectacle display with support, for direct wall fastening

Mode of operation

Reduction clip particularly for smaller frames

■ Reduction clip included in delivery

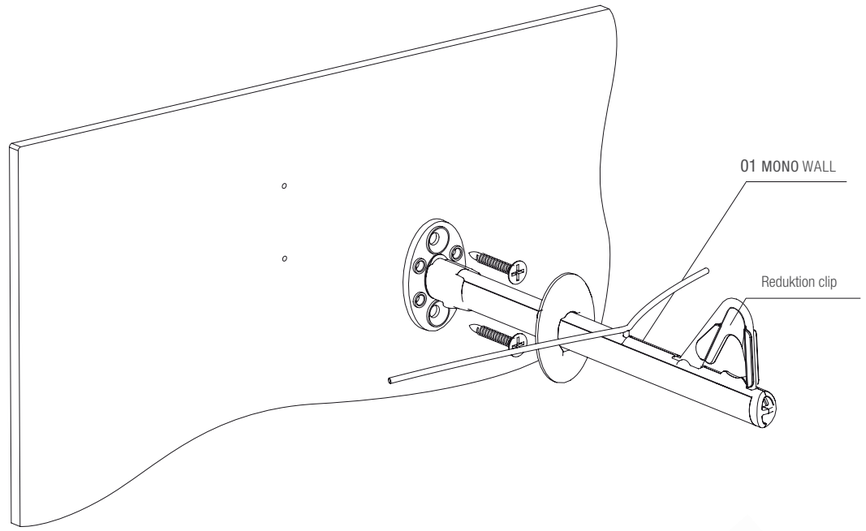

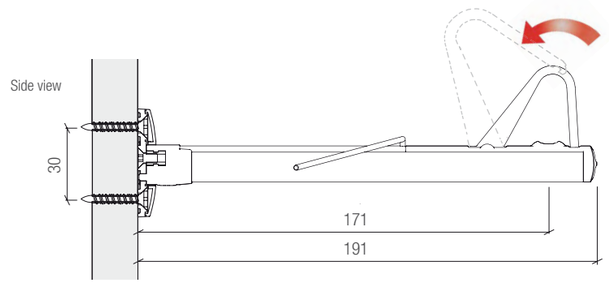

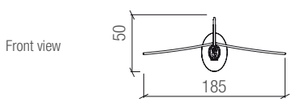

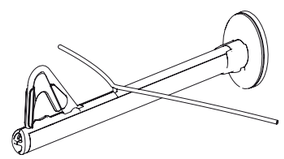

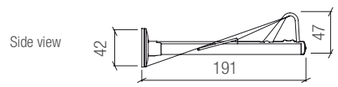

01

MONO WALL, lockable single spectacle display with support for direct wall fastening. Reduction clip included in delivery.

185 x 50 x 191 mm 14.12.11.05

MONO PANEL

The design is simple but elegant, with a perfect combination of silver-coloured anodized aluminium and high-quality plastics. Due to a reduction clip every kind of model in every size can be displayed in an optimal way.

Single spectacle display for mounting on perforated panels

Mode of operation

Reduction clip particularly for smaller frames

■ Reduction clip included in delivery

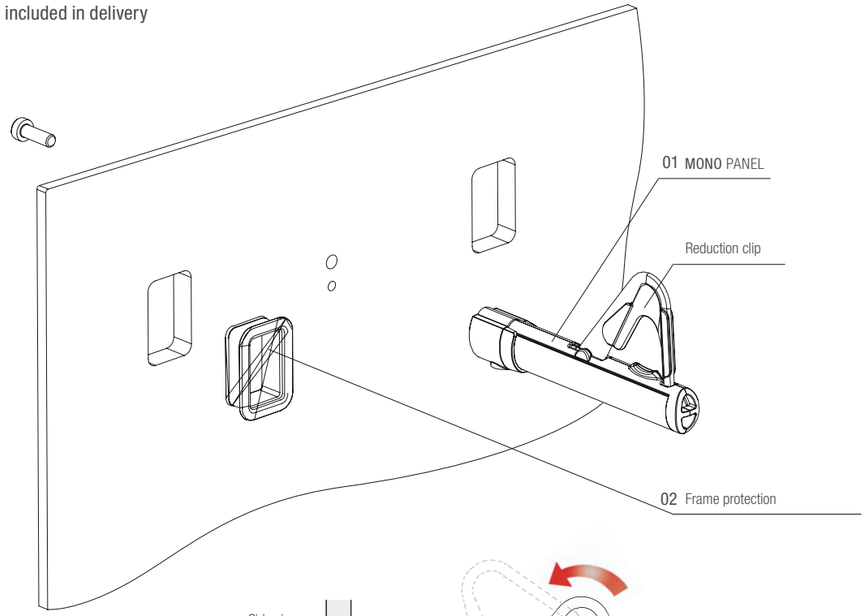

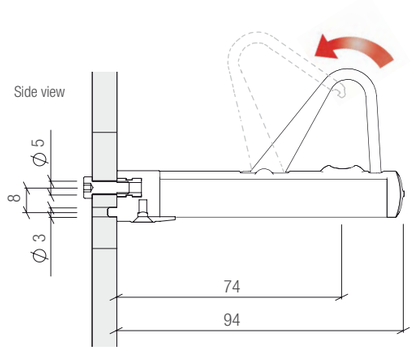

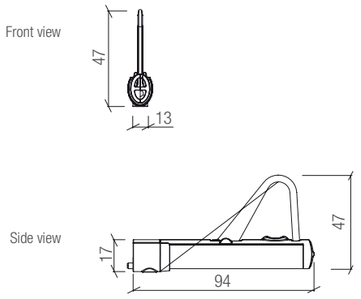

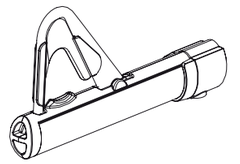

01
MONO PANEL, lockable single spectacle display for mounting on perforated panel. Reduction clip included in delivery.

13 x 47 x 94 mm 14.12.10.01

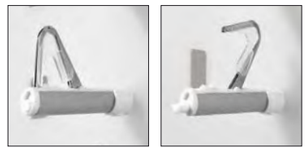

MONO RACK

With MONO RACK it is possible to secure and unlock spectacles separately. The lockable single spectacle display can be mounted easily onto horizontal shelves and is particularly suitable for high quality frames.

Single spectacle display for mounting on shelves

Mode of operation

Reduction clip particularly for smaller frames

■ Reduction clip included in delivery

01 MONO RACK

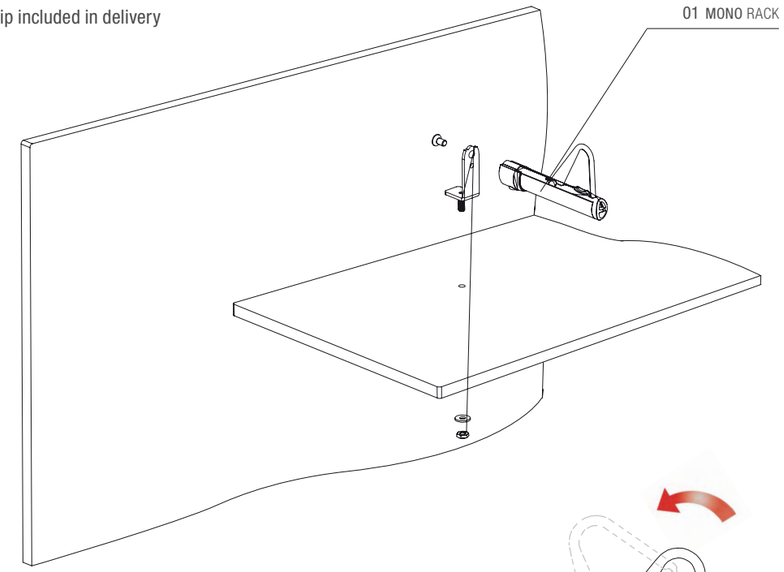

Side view

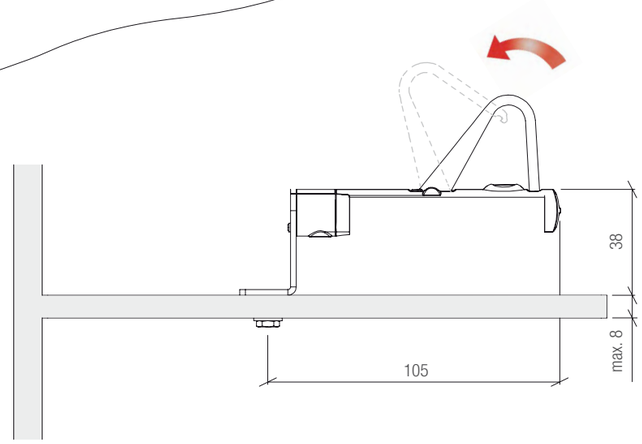

Front view

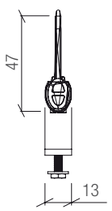

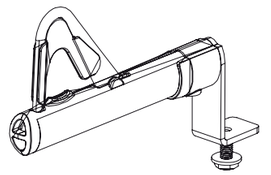

Side view

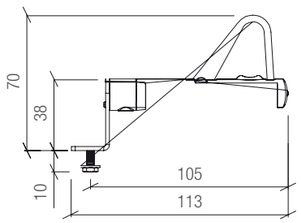

01
MONO RACK, lockable single spectacle display for mounting on shelves.
Reduction clip included in delivery.

13 x 70 x 113 mm 14.12.13.01

PIN

PIN supports are perfectly suitable for displaying a great number of frames, as well as for an easy try-on of spectacles. Combined with perforated panels, PIN fits into every shop. The clear design guarantees an optimal appearance of every type of spectacle.

PIN support

Frame protection for perforated panels

■ For perforated panels

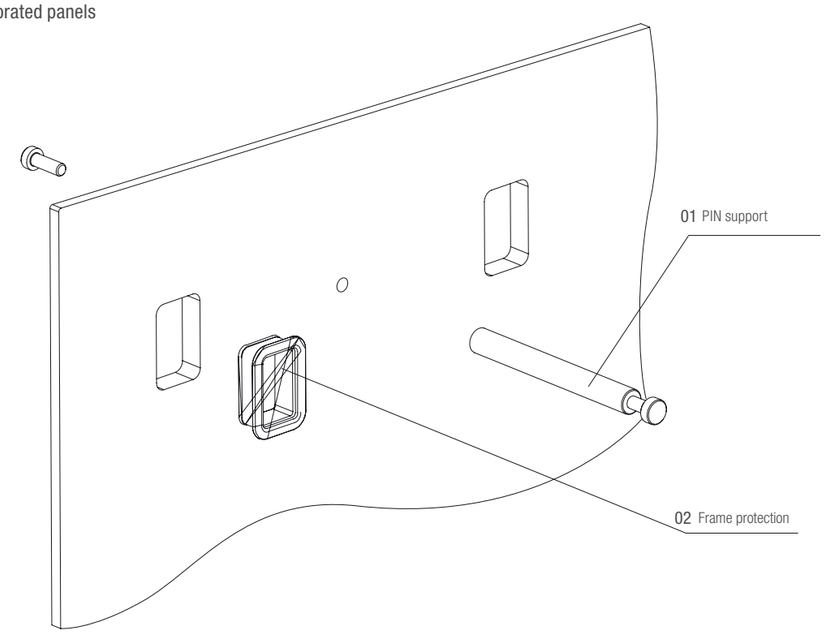

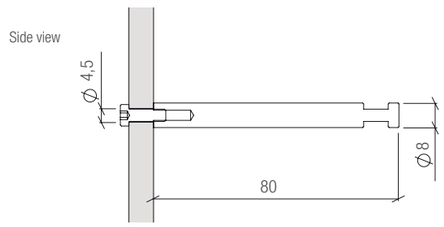

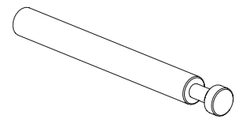

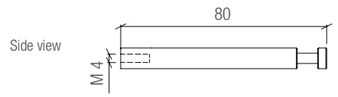

01

PIN support made of nickel-plated steel

Ø 8 x 80 mm M2/13.20.00.00

02
Frame protection for perforated panels

Installation dimensions
18 x 28 x 8 mm M2/13.10.00.00

MONO & PIN

Fields of applications

OPTICS

SPORTS

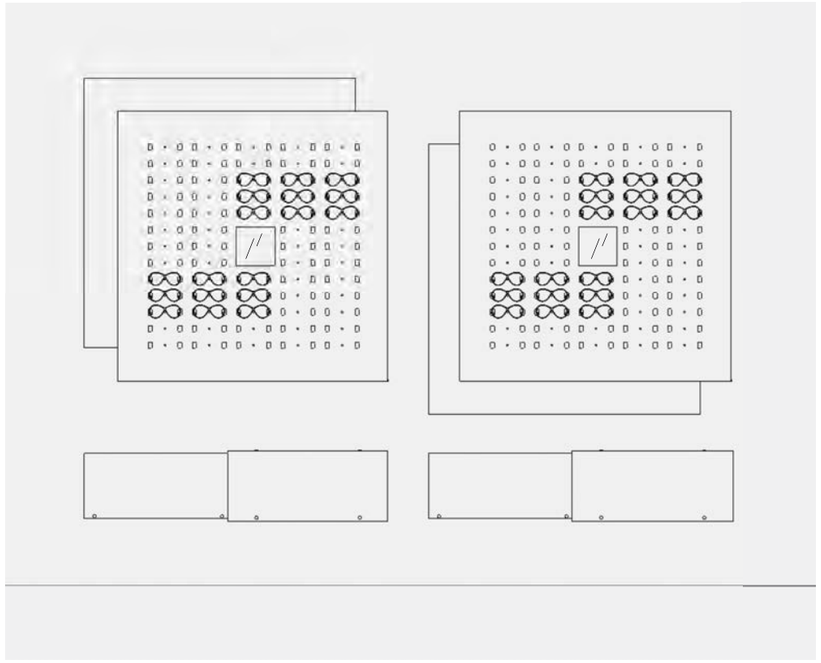

OPTICS

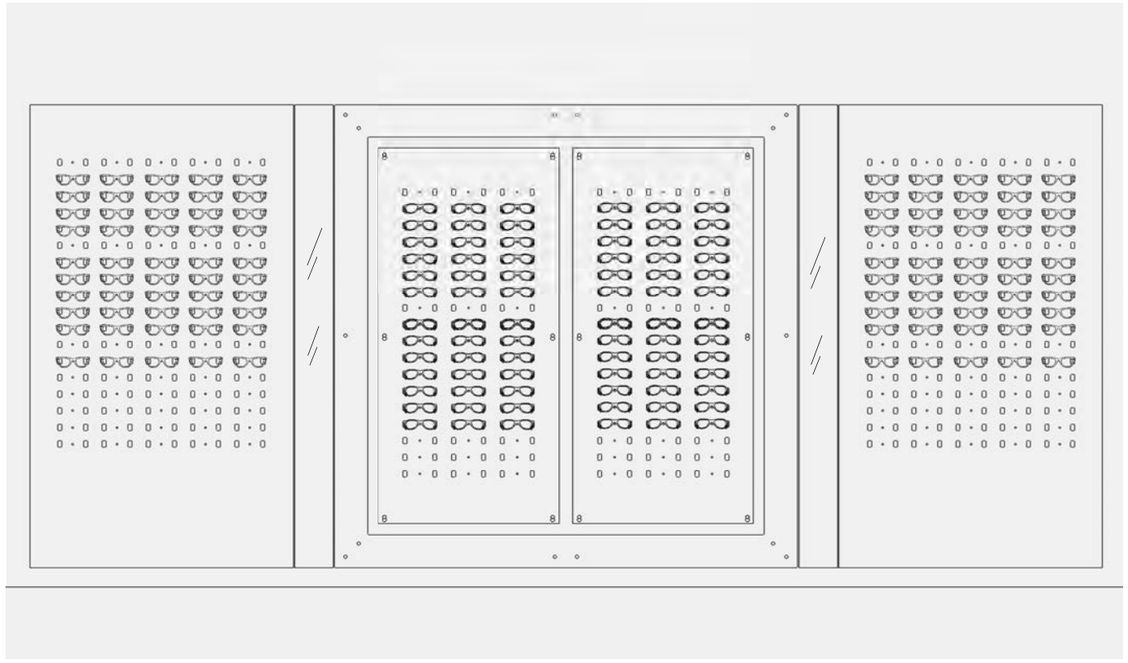

OPTICS

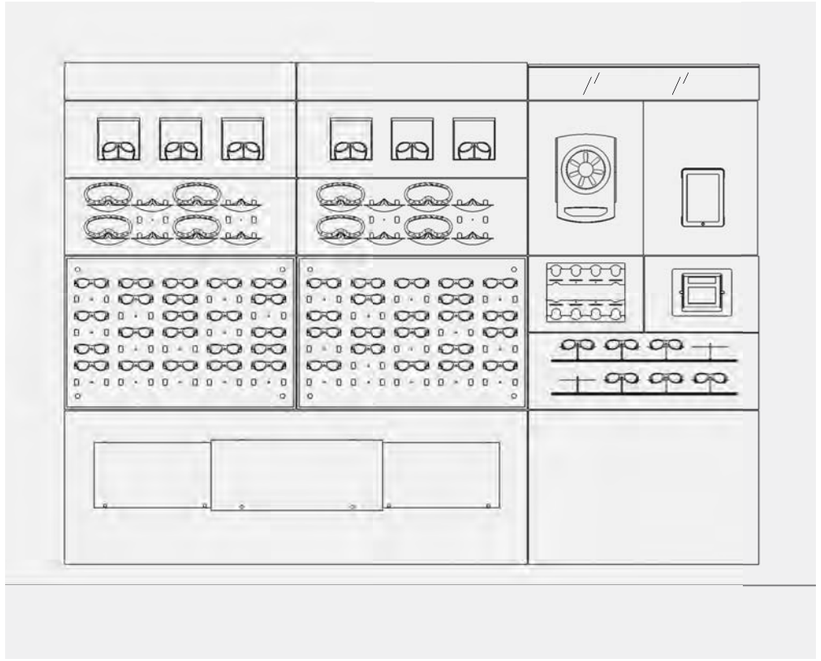

OPTICS SPORTS

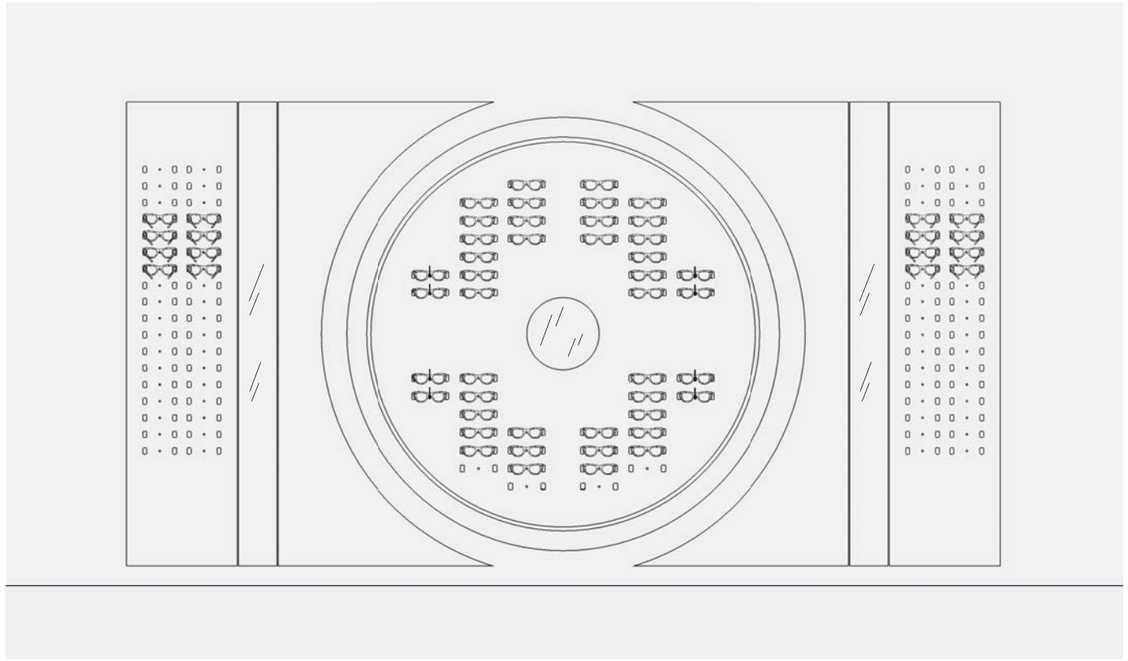

OPTICS

P.O.S. SY STEM

Fields of application

- OPTICS
- HEARING ACOUSTICS
- WATCHES
- JEWELLERY
- FRAGRANCES + COSMETICS
- SHOES
- BAGS
- LEATHER GOODS
- ACCES-SORIES
- BLISTER
- CONSUMER ELECTRONICS
- MOBILE PHONING
- FASHION
- SPORTS
- HEALTH CARE/ PHARMACY

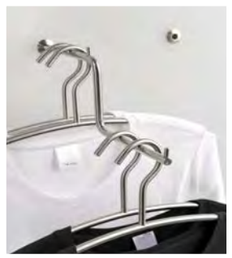

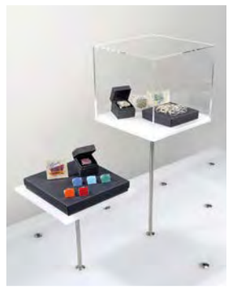

P.O.S.

SUITABLE FOR HORIZONTAL AND VERTICAL MOUNTING

VERSATILE POSSIBILITIES FOR ARRANGING WALL AND SHOP WINDOW DISPLAYS

P.O.S. SYSTEM

For designing your merchandise presentation variable, our P.O.S.-system is available for horizontal and vertical mounting. In combination with different product carriers, the P.O.S. system offers an utmost of flexibility for wall and shop window displays. The P.O.S. bolt can be easily inserted into an acrylic glass panel or wooden plate and is fixed from the backside.

System components can be inserted easily

Secure hold by turning in

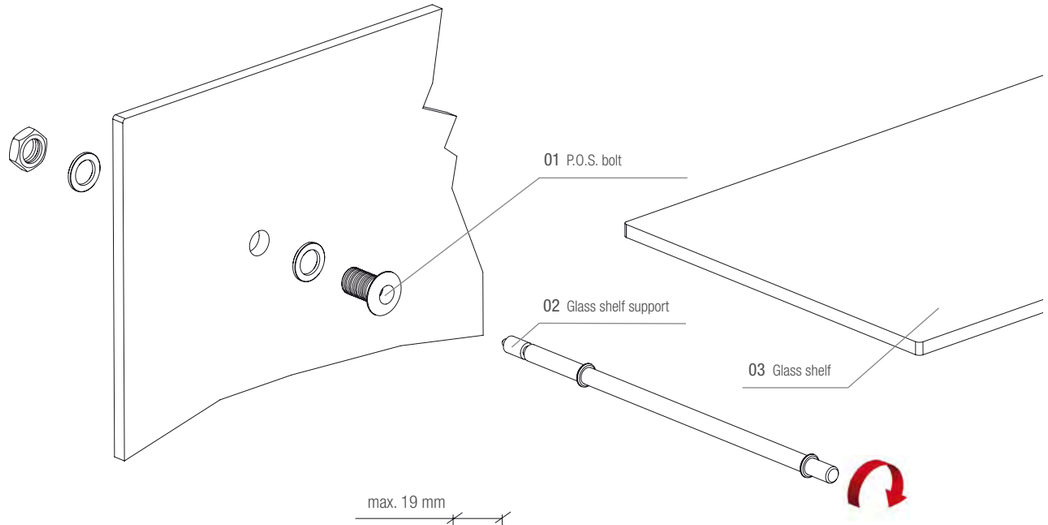

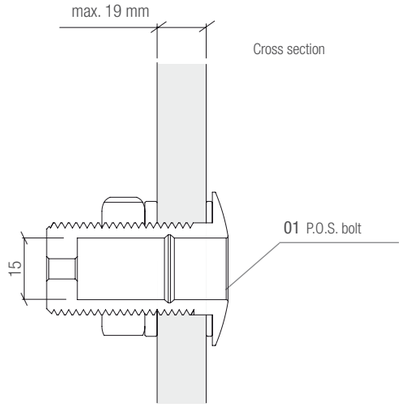

- Can be integrated into wooden or acrylic glass panels

Vertical mounting

Horizontal mounting

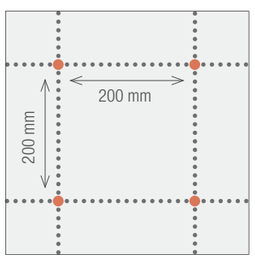

Recommended grid

P.O.S. SYSTEM

01

P.O.S.-bolt made of steel, matt nickel-plated

25 x 25 x 30 mm 13.66.00.02

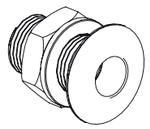

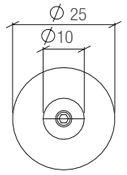

Front view

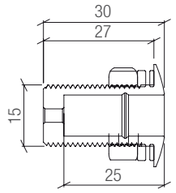

Side view

02

Glass shelf support for glass shelves, 1 piece, made of stainless steel, for P.O.S. bolt

10 x 10 x 275 mm 15.66.32.02

max. 2 kg

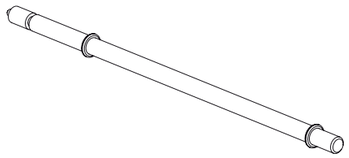

Front view

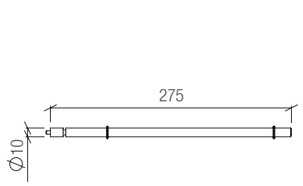

Side view

03

Universal carrier made of stainless steel, for coat hangers

20 x 20 x 125 mm 15.90.00.01

max. 2 kg

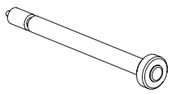

Front view

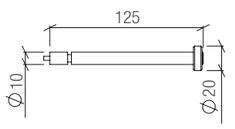

Side view

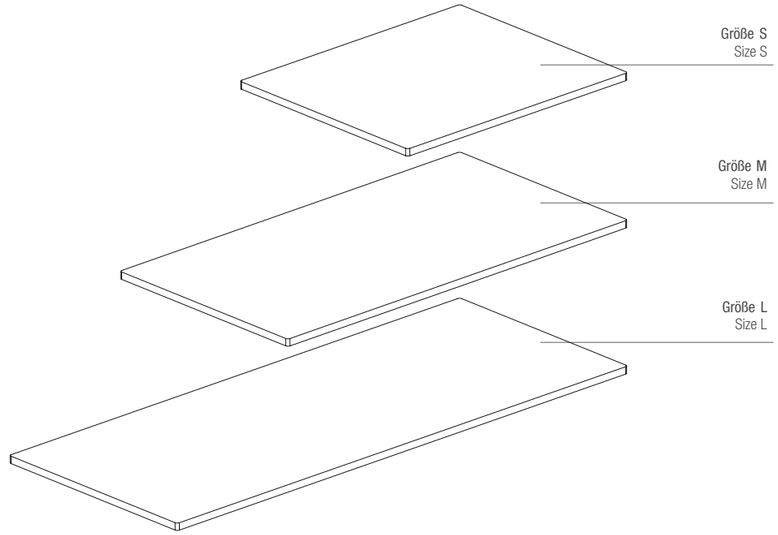

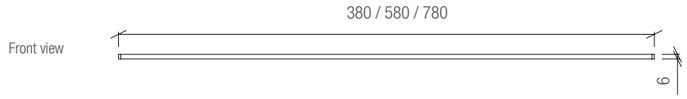

Front view

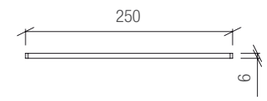

Side view

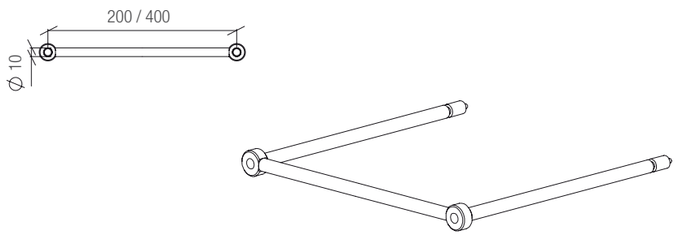

Front view

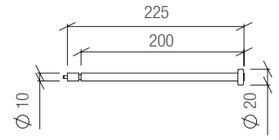

Side view

04

Glass shelf, available in different colours and dimensions

Size S	380 x 250 x 6 mm
Size M	580 x 250 x 6 mm
Size L	780 x 250 x 6 mm

Glass, one-sided satined

Size S	17.00.50.00
Size M	17.00.70.00
Size L	17.00.90.00

Clear glass

Size S	17.00.50.01
Size M	17.00.70.01
Size L	17.00.90.01

White-glass, one-sided satined

Size S	17.00.50.03
Size M	17.00.70.03
Size L	17.00.90.03

05

Double universal carrier made of stainless steel, for coat hangers

200 x 20 x 225 mm 15.90.00.02

400 x 20 x 225 mm 15.90.00.03

max. 4 kg

P.O.S. SY STEM

06
Stepped carrier made of stainless steel, for coat hangers

10 x 120 x 325 mm 15.66.15.00

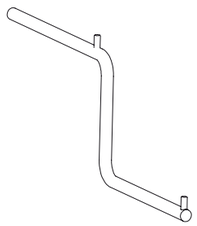

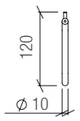

Front view

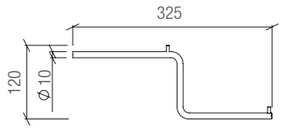

Side view

07
Circular universal carrier made of stainless steel, for scarves etc.

210 x 210 x 125 mm 15.66.16.00

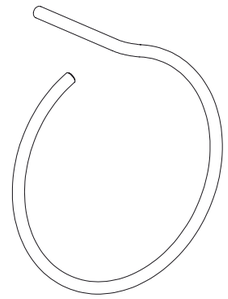

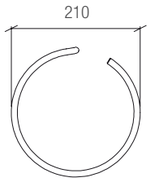

Front view

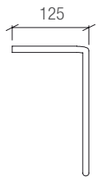

Side view

08

Support rail made of steel, silver powder-coated, with displays for blister packs, nickel-plated

400 x 35 x 25 mm 15.66.17.00

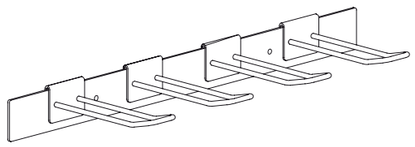

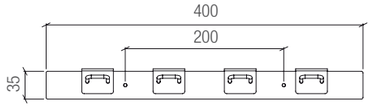

Front view

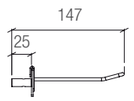

Side view

Side view

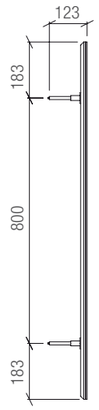

Front view

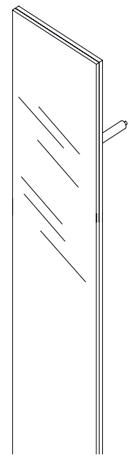

09

Mirror, including wall mounting kit for P.O.S.-bolt

150 x 1165 x 123 mm 15.66.11.00

150 x 1500 x 123 mm 15.66.14.00

Top view

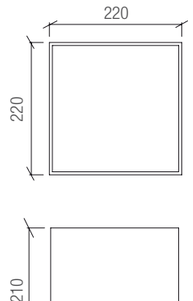

Side view

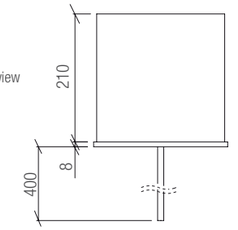

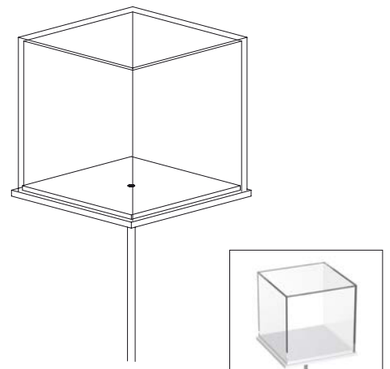

10

Showcase with acrylic glass cover

Cube 210 x 210 mm
Height of rod 400 mm

polarwhite, 16 mm
Base plate, acrylic glass, polarwhite, 16 mm
17.76.40.01

Base plate MDF anthracite, 16 mm
17.66.40.02

Top view

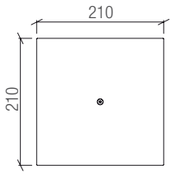

Side view

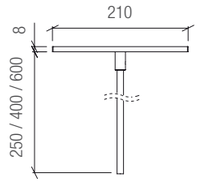

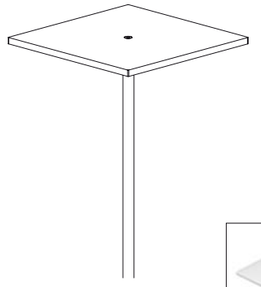

11

Acrylic glass shelf, square

210 x 210 mm

Height 250 mm
polarwhite 17.66.30.25
glossy white 17.66.30.26

Height 400 mm
polarwhite 17.66.30.30
glossy white 17.66.30.31

Height 600 mm
polarwhite 17.66.30.40
glossy white 17.66.30.41

P.O.S. SY STEM

12

Acrylic glass shelf, circular

Ø 210 mm

Height 250 mm
polarwhite 17.66.28.25
glossy white 17.66.28.26

Height 400 mm
polarwhite 17.66.28.30
glossy white 17.66.28.31

Height 600 mm
polarwhite 17.66.28.40
glossy white 17.66.28.41

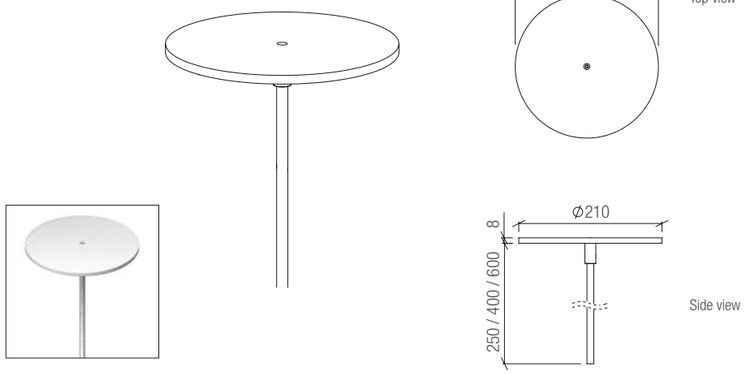

13

PUR rod + spectacle frame support

PUR rod, length customized, including adapter for P.O.S.-bolt
13.08.66.02

PUR spectacle display for vertical mounting
14.09.00.02

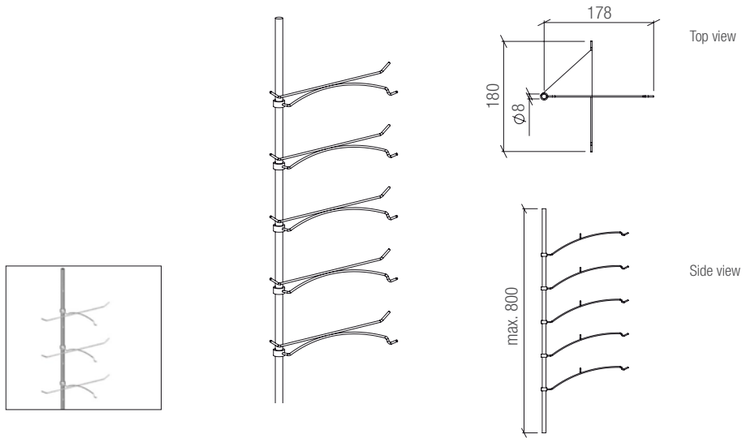

14

SPT graphic panel DIN A1 consisting of 2 acrylic glass panels, transparent, and 1 centred acrylic glass panel, polarwhite, including fixing elements for P.O.S.-bolts. Without poster (max. poster size DIN A1 594 x 841 mm)

594 x 890 x 14 mm 17.66.52.03

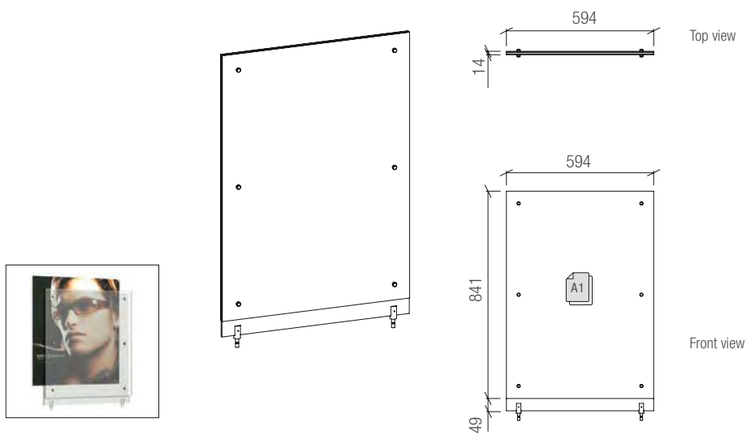

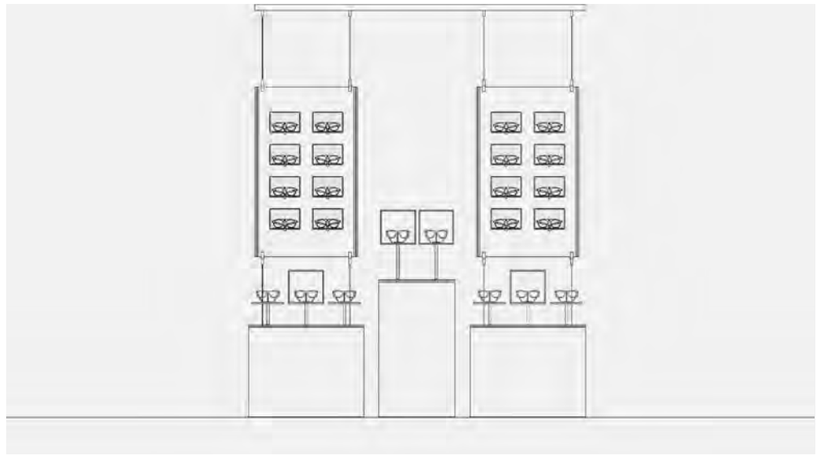

OPTICS

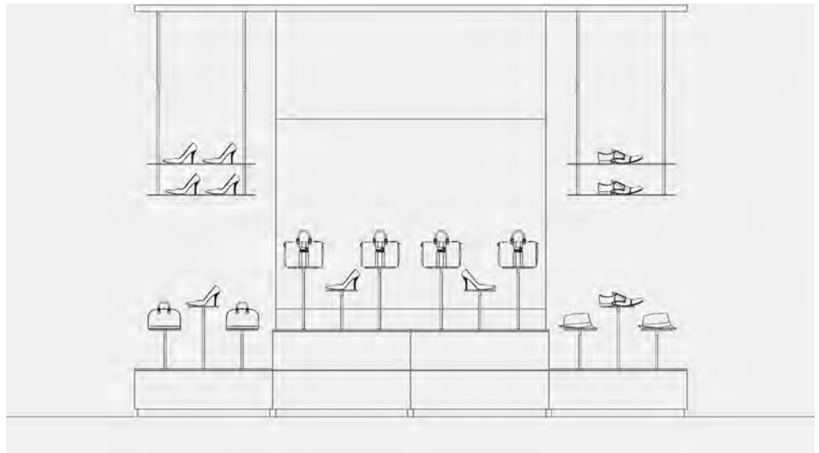

SHOES BAGS

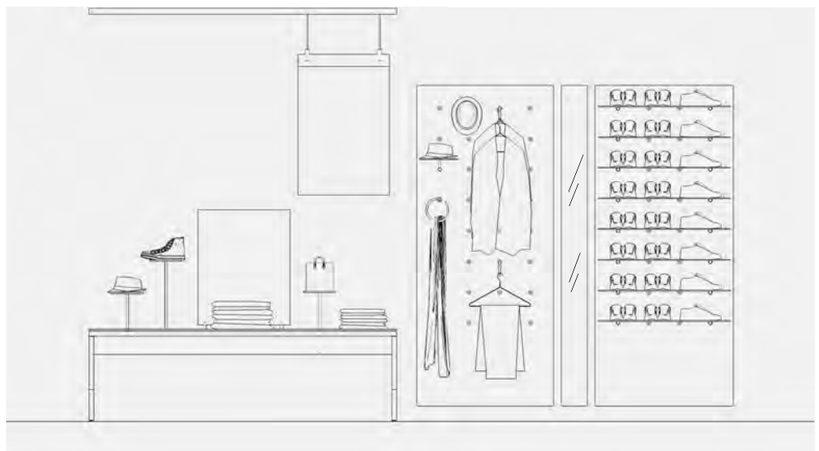

SHOES BAGS ACCESSORIES FASHION

Fields of application

- OPTICS
- HEARING ACOUSTICS
- WATCHES
- JEWELLERY
- FRAGRANCES + COSMETICS
- SHOES
- BAGS
- LEATHER GOODS
- ACCES-SORIES
- BLISTER
- CONSUMER ELECTRONICS
- MOBILE PHONING
- FASHION
- SPORTS
- HEALTH CARE/ PHARMACY

VARIO [MP] & VARIO [LB]

Fields of application

- OPTICS
- HEARING CARE
- ACCES-SORIES
- SPORTS
- HEALTH CARE/ PHARMACY

TO DISPLAY THEMER CHANDISE,A PERFORA-TED PANEL SERVES AS BACKGROUND FORV ARIO[LB].PR ODUCT CARRIERS CAN BEH OOKED INQU ITE SIMPLY

VARIO [MP]
PRODUCT CARRIERS CAN BE ARRANGED AGAIN AND AGAIN
VARIO [LB]

VARIO[MP] PRODUCT CARRIERS ARE EASILY FIXED TO A METAL PLATE BY MAGNETS OR DIRECTLY SCREWED ON

VARIO [MP]

VARIO [MP] gives you the opportunity to divide the display area freely. The system components are quite simply fixed to a metal plate on the favoured spot. Therefore, the components can be arranged according to your wishes and demands again and again.

Magnetic mounting on metal plates

Screw-on version for mounting on wood

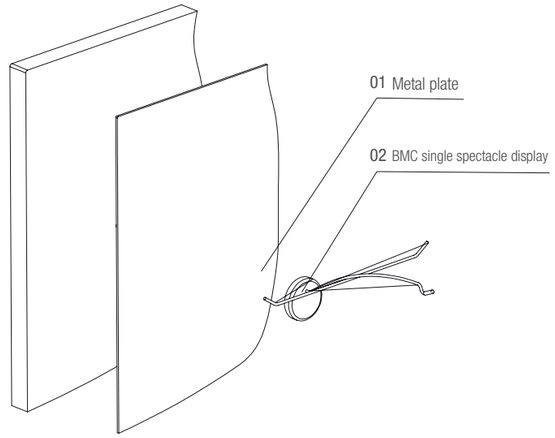

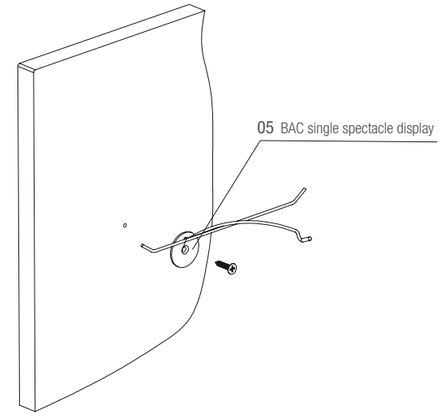

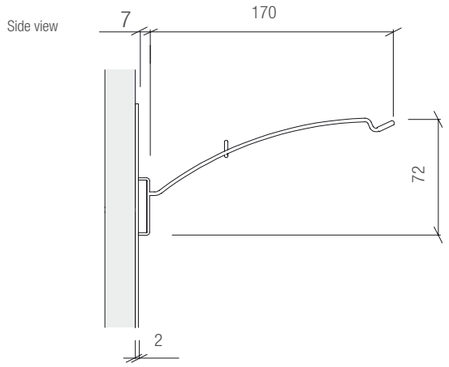

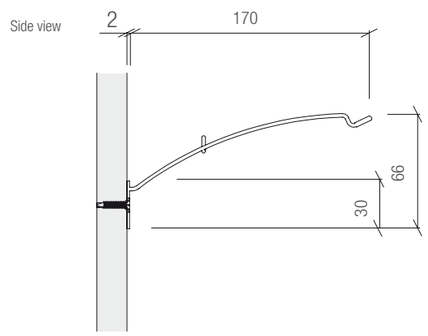

2 160 160

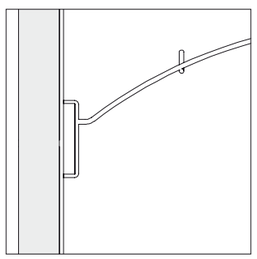

Magnetic mounting on metal plates

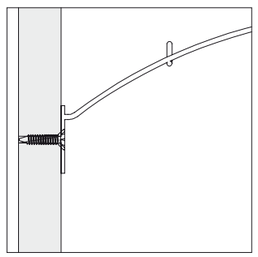

Screw-on version for mounting on wood

■ Pattern-free display area

VARIO [MP]

01

Metal plate (without back panel), silver-coloured coated, made to measure.
Other surface finishes on request.

Note: Metal plates can be fixed with magnets on a mounting plate.

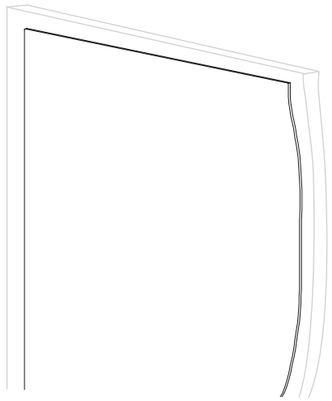

Side view

02

BMC single spectacle display with magnet, nickel-plated

180 x 72 x 177 mm 14.07.00.02

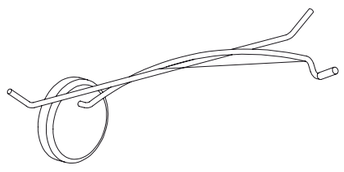

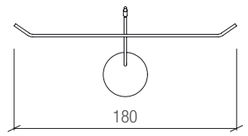

Front view

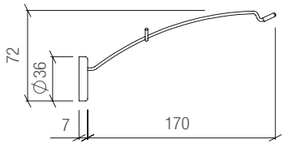

Side view

03

BMC spectacle case display with magnet, nickel-plated

80 x 36 x 82 mm 19.77.30.02

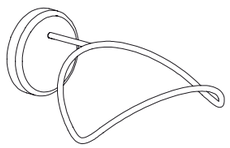

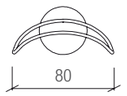

Front view

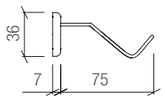

Side view

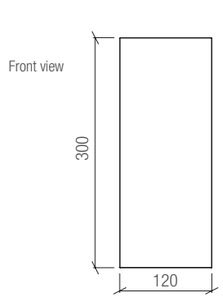

Front view

Seitenansicht
Side view

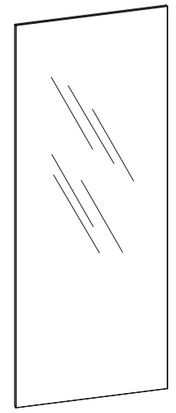

04

Mirror, rectangular, on metal plate

120 x 300 x 11 mm

A.
With magnet 21.05.77.00

B.
Screw fixing 21.05.88.00

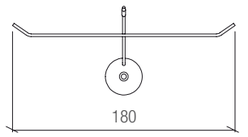

Front view

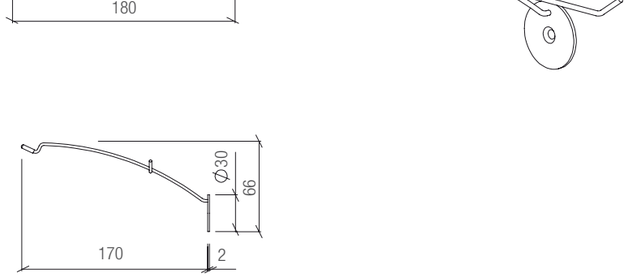

Side view

05

BAC single spectacle display for screw fixing, nickel-plated

180 x 66 x 172 mm 14.08.00.02

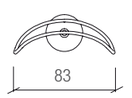

Front view

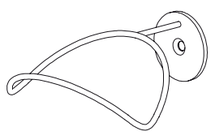

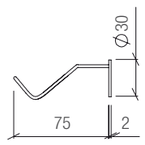

Side view

06

BAC spectacle case display for screw fixing, nickel-plated

83 x 30 x 77 mm 19.88.30.02

VARIO [LB]

To display the merchandise, a perforated panel serves as background for VARIO [LB]. The fitting elements can be hooked in quite simply. As with other systems from the VARIO line, with VARIO [LB] the display area can also be redecorated quickly and effortlessly.

System components can be hooked in

Great flexibility through narrow pattern

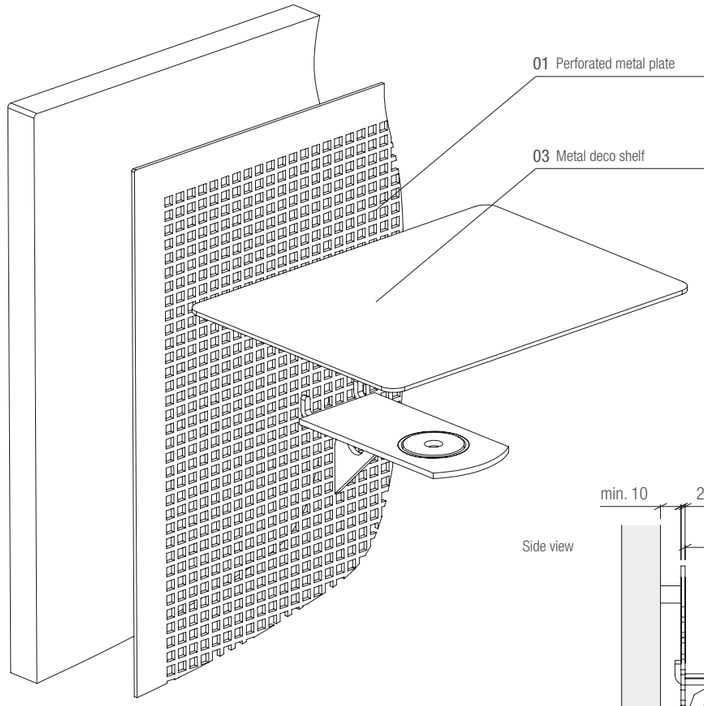

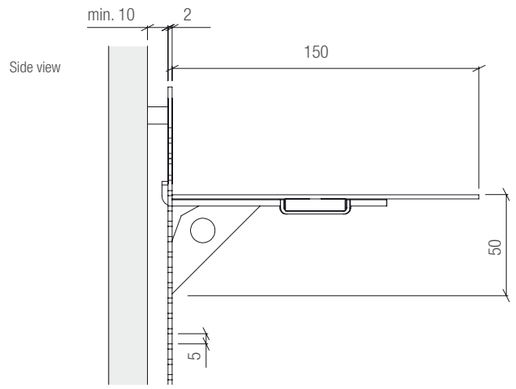

Side view

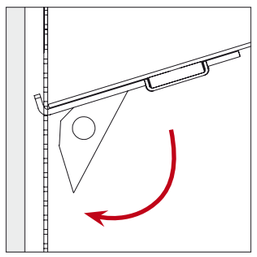

System components can be hooked in

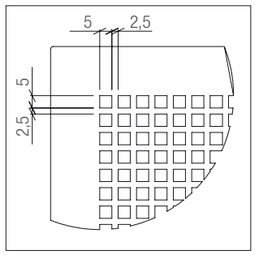

Great flexibility through narrow pattern

- Redecoration within seconds

VARIO [LB]

01

Perforated metal plate, white powder-coated, made to measure (max. 1000 x 2000 mm). Other surface finishes on request.

Note: The perforated metal plates are fixed by means of spacers.

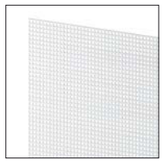

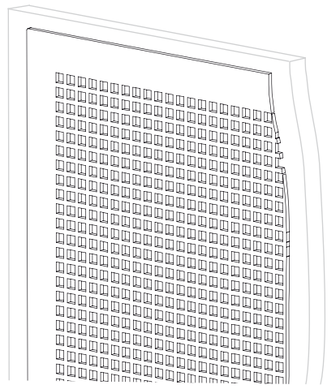

02

BBC single spectacle display, white powder-coated

180 x 60 x 170 mm 14.03.00.02/01

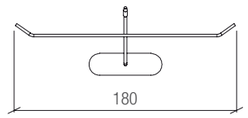

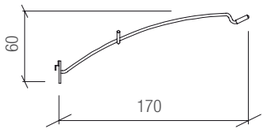

03

Metal deco shelf, made of metal, including support

A. Rectangular
200 x 2 x 150 mm 17.01.33.02

B. Round
180 x 2 x 150 mm 17.02.33.02

max. 2 kg

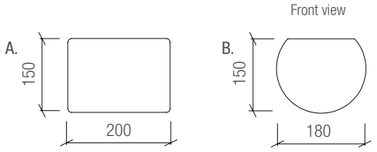

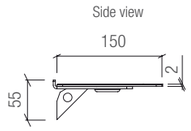

Front view

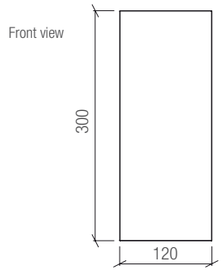

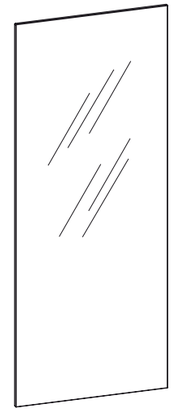

Front view

Side view

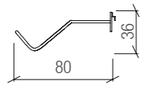

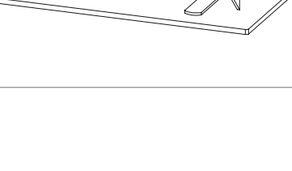

Front view

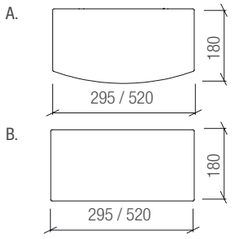

Side view

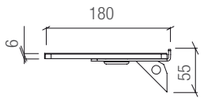

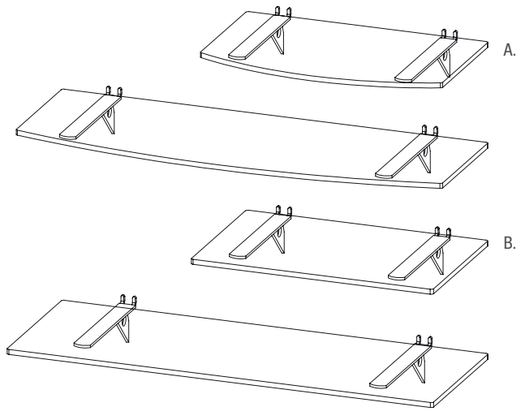

04

Mirror, rectangular, on metal plate

120 x 300 x 11 mm 21.05.33.00

05

BBC spectacle case display, white powder-coated

83 x 36 x 80 mm 19.33.30.02/01

06

Glass shelf, including support

A. Rectangular
295 x 180 x 6 mm 17.33.30.02
520 x 180 x 6 mm 17.33.52.02

B. Rounded
295 x 180 x 6 mm 17.01.30.01
520 x 180 x 6 mm 17.02.52.01

max. 4 kg

VARIO [MP] & VARIO [LB]

Fields of application

- OPTICS
- HEARING CARE
- ACCES-SORIES
- SPORTS
- HEALTH CARE/ PHARMACY

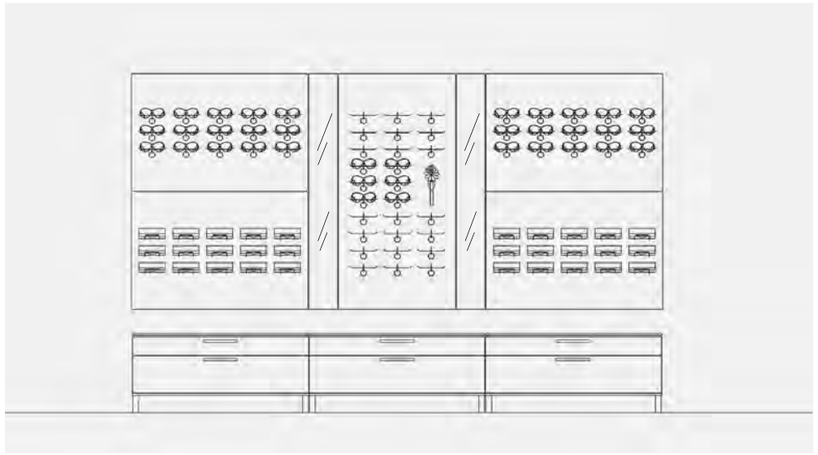

OPTICS

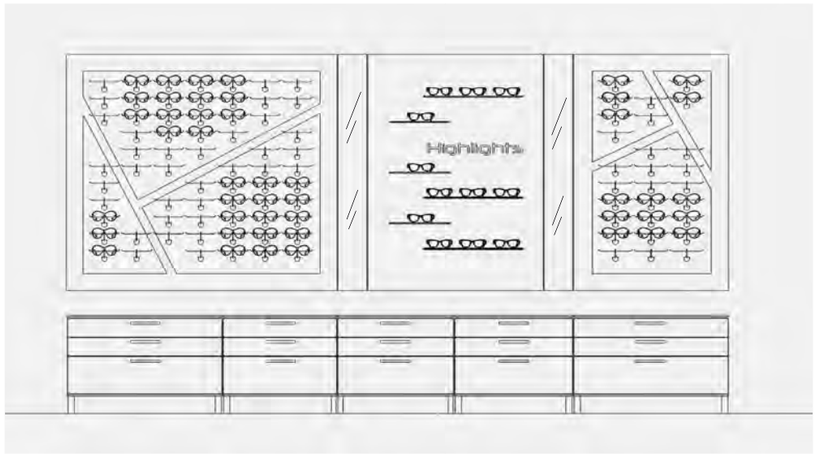

OPTICS

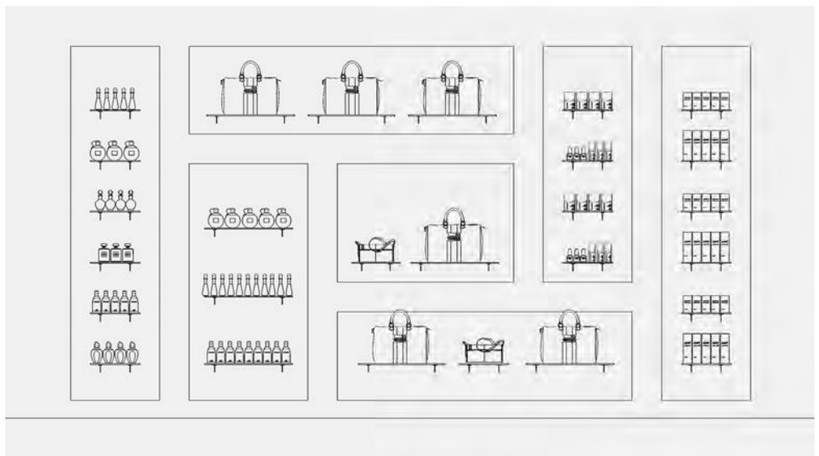

ACCESSORIES

MOVING MERCHANDISE DISPLAYS

MOVE

Fields of application

- OPTICS
- HEARING CARE
- WATCHES
- JEWELLERY
- FRAGRANCES + COSMETICS
- ACCES-SORIES
- MOBILE PHONING
- SPORTS

MOVE IS STIRRING UP YOUR PRESENTATION

MOVE
SMART SELECT
[interactive product finder]

SHELVES MOVE CONTINUOUSLY ON AN OVAL TRACK AND THUS CREATES A REAL EYE-CATCHER!

MOVE

We set your glasses presentation in motion! MOVE displays your products in a moving way. Shelves for glasses and other quality accessories move continuously on an oval track and thus creates a real eye-catcher either available as table or window option!

Convenient operation via remote control.

By connecting with a GLOW LED lighting system, your merchandise is presented at its best.

Optional available with

SMART SELECT
[interactive product finder]

■ MOVE is stirring up your presentation of eyeglasses

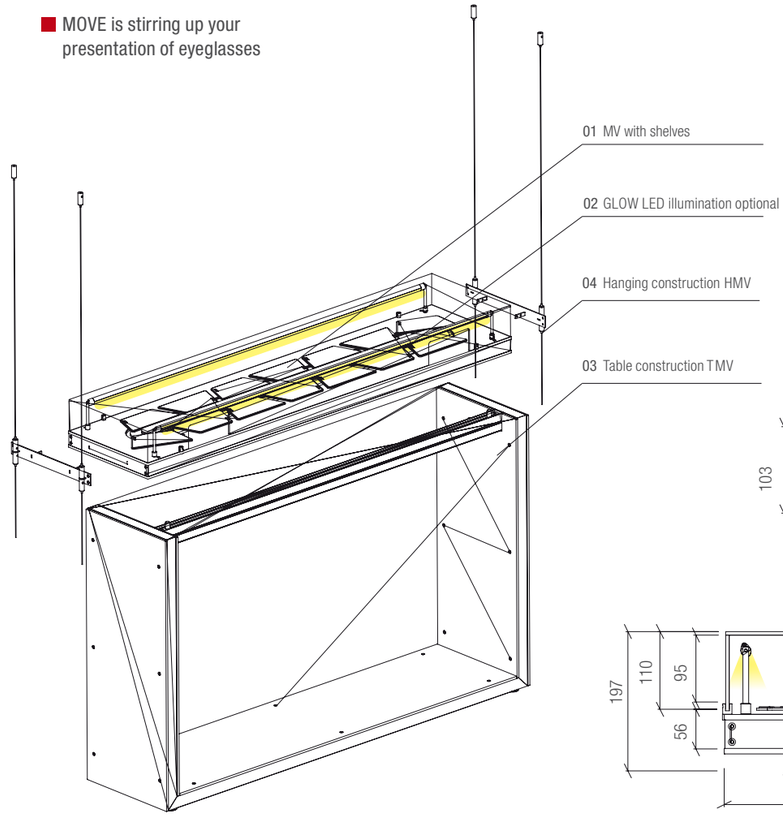

Top view shelf

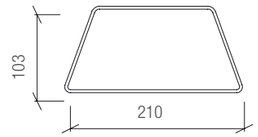

Side view

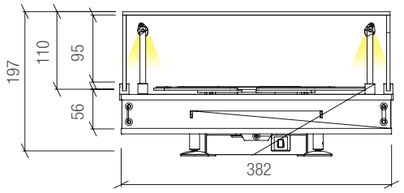

The shelves
move continuously on an oval track

Table construction for MOVE

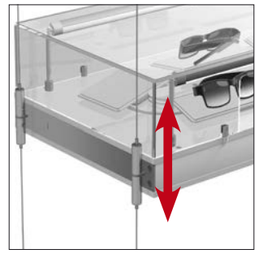

Hanging construction for MOVE

MOVE

01

MOVE basic element in 3 standard lengths: Substructure made of aluminium profile, with display case made of acrylic glass (transparent), including drive and remote control. Optional with GLOW LED lighting system and 2 meshes. Please order shelves separately, available versions see page 160.

MV 10
for 10 shelves
1202 x 197 x 382 mm 52.01.10.00

MV 14
for 14 shelves
1602 x 197 x 382 mm 52.01.14.00

MV 18
for 18 shelves
2002 x 197 x 382 mm 52.01.18.00

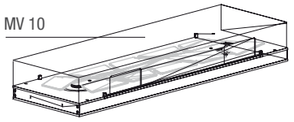

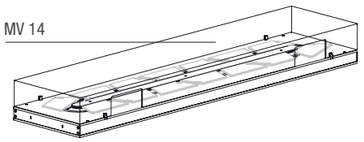

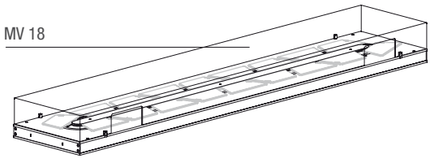

Top view

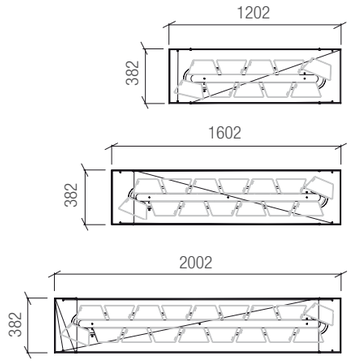

Front view

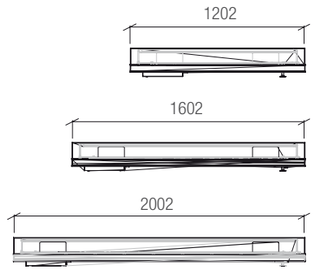

Side view

Top view

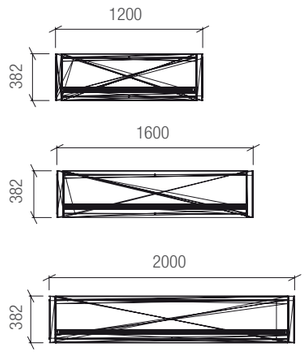

Front view

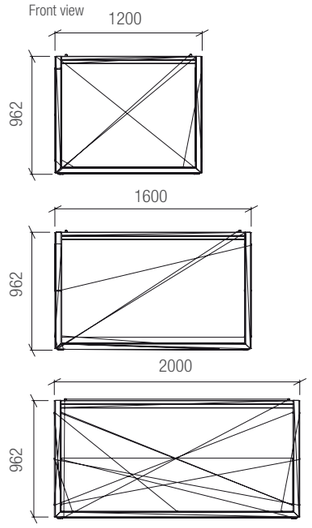

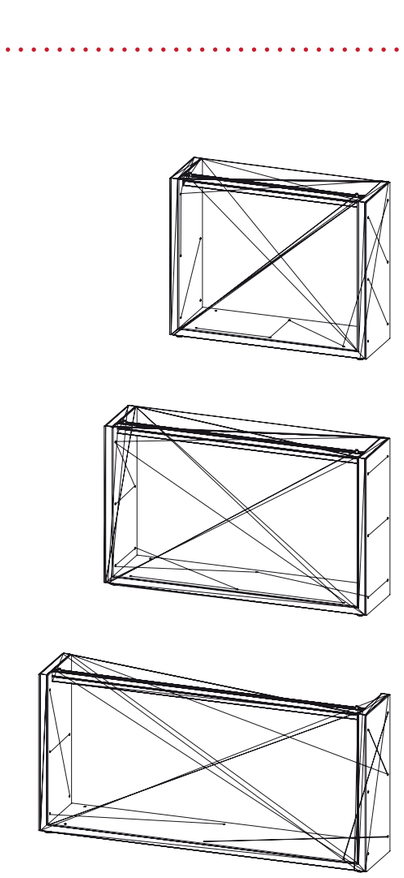

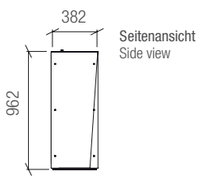

Seitenansicht
Side view

03

Table construction for MOVE in 3 standard lenghts: Structure made of silver-coloured anodized speed frame, planked with acrylic glass or derived timber product. Customized design on request.

TMV 10
for MV 10
1200 x 962 x 382 mm 52.10.10.00

TMV 14
for MV 14
1600 x 962 x 382 mm 52.10.14.00

TMV 18
for MV 18
2000 x 962 x 382 mm 52.10.18.00

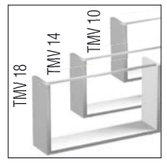

02

GLOW LED illumination, pair

for **MV 10** 52.02.10.00
for **MV 14** 52.02.14.00
for **MV 18** 52.02.18.00

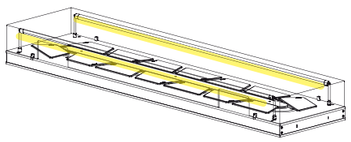

Front view

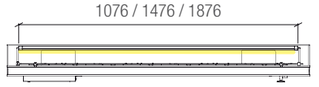

Side view

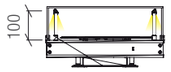

Top view

Side view

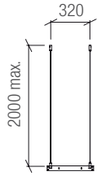

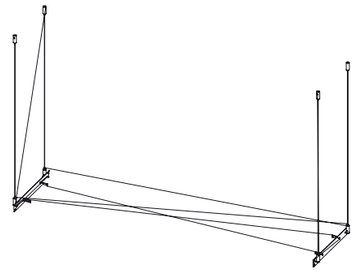

04

Hanging construction for MOVE: mounting set for suspension from the ceiling with 4 stainless steel ropes (2 m length each*

for MV
Length **max. 2000 mm**

52.15.10.00

MOVE

05
Universal shelf made of acrylic glass, glossy white, with white silicone pads

210 x 2 x 103 mm 52.20.00.01

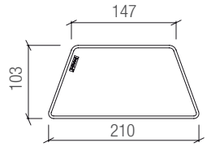

Top view

Side view

06

Shelf made of acrylic glass, glossy white, with white silicone pads and spectacle display made of acrylic glass, transparent

210 × 47 x 103 mm 52.20.00.02

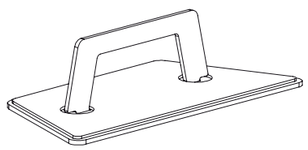

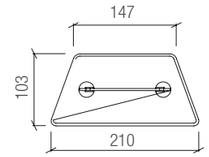

Top view

Front view

07

Shelf made of acrylic glass, glossy white, with white silicone pads and clips for 2 watches

210 x 52 x 103 mm 52.20.00.03

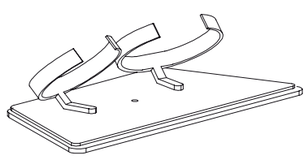

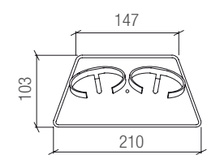

Top view

Front view

FRAGRANCES + COSMETICS

WATCHES JEWELLERY

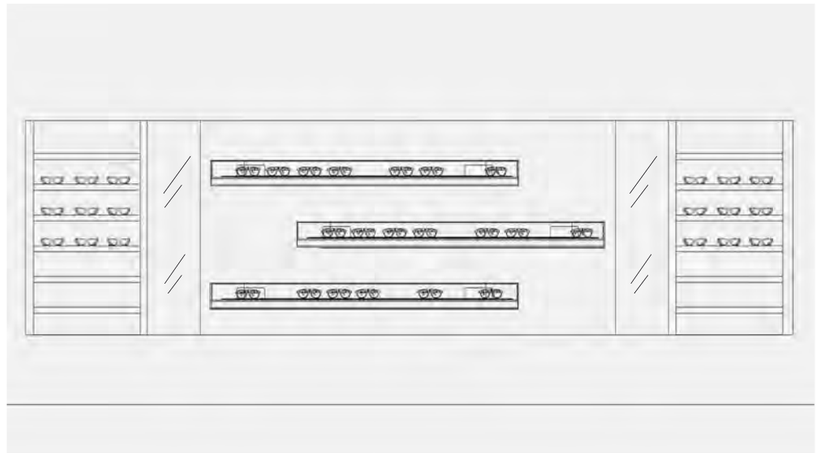

OPTICS

Fields of application

- OPTICS
- HEARING CARE
- WATCHES
- JEWELLERY
- FRAGRANCES + COSMETICS
- ACCES-SORIES
- MOBILE PHONING
- SPORTS

ELEVENDER

Fields of application

- OPTICS
- WATCHES
- JEWELLERY
- FRAGRANCES + COSMETICS
- MOBILE PHONING
- SPORTS

DISPLAY AND STORAGE SYSTEM IN ONE

ELEVENDER
SMART SELECT
[interactive product finder]

SMART SELECT: SELECTING THE RIGHT PRODUCT BY DIRECT SEARCH OR PRODUCT ASSISTANT!

ELEVENDER KEEPS THE GOODS THEREIN IN A CONSTANT CIRCULATION ACCORDING TO A PATERNOSTER ELEVATOR PRINCIPLE

WITH ELECTRONIC CONTROL

ELEVENDER

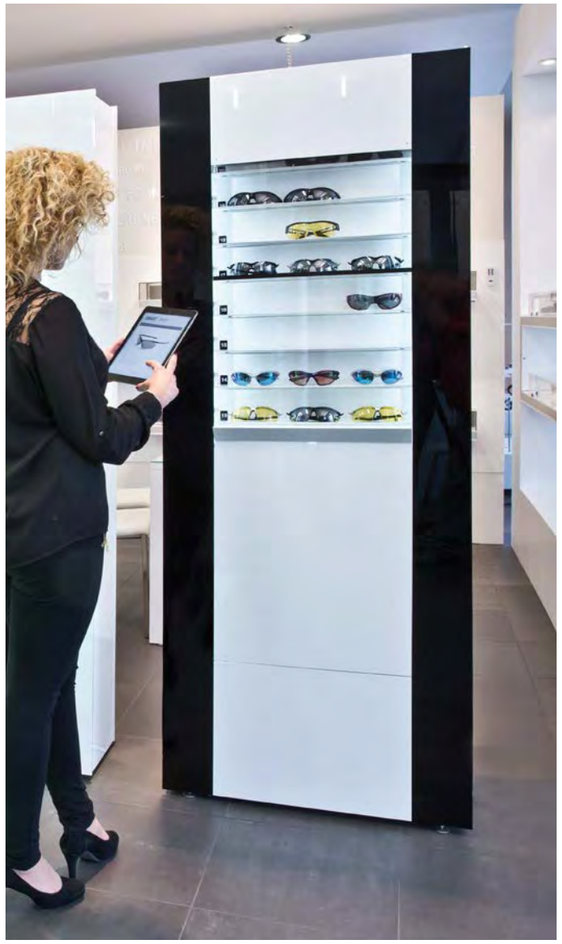

ELEVENDER is a display and storage system in one with electronically control and it keeps the goods therein in a constant circulation according to a paternoster elevator principle. The continuous presentation results in a doubled display area and therefore replaces the storage space. Due to the constant movement, all models are shown. Also this compensates the accompanying effect that goods being stored in drawers are not sold easily.

Suitable for all kind of products

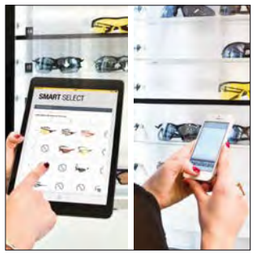

Optional available with

SMART SELECT
[interactive product finder]

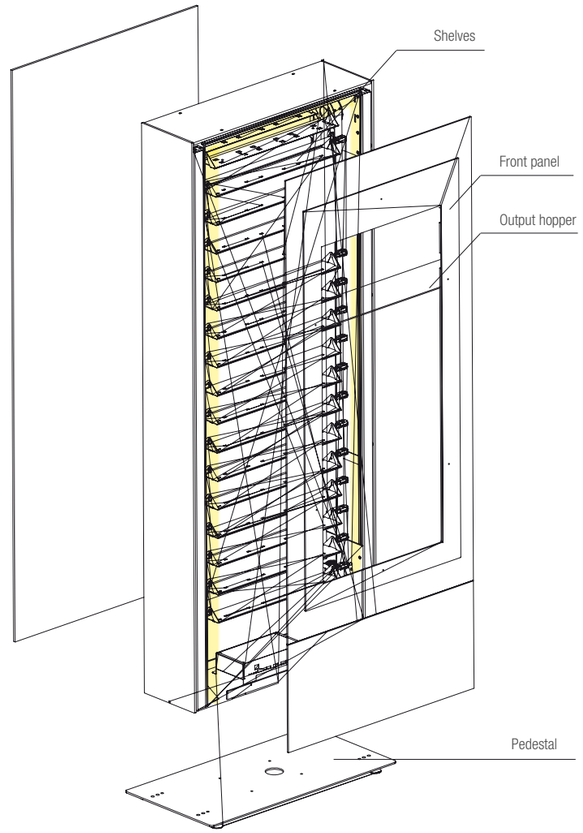

- Interactive display with full product information

Detail view

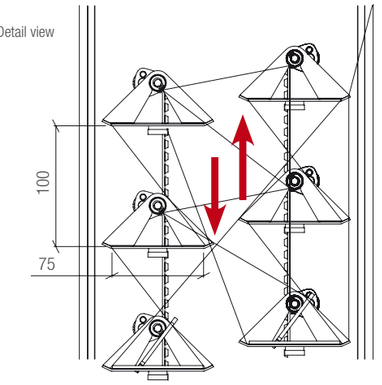

To set the goods in motion

Basic principle of rotating presentation

To design the housing / showcase

ELEVENDER

01

ELEVENDER in 3 standard widths: Substructure made of aluminum profile, shelves made of steel, white powder-coated. Housing made of acrylic glass, glossy, with front panel made of acrylic glass, transparent, with output hopper. Including drive as well as LED illumination. Please order inserts separately.

EL 36
for 36 positions
500 x 2010 x 255 mm 53.00.50.00

EL 72
for 72 positions
660 x 2010 x 255 mm 53.00.70.00

EL 108
for 108 positions
820 x 2010 x 255 mm 53.00.80.00

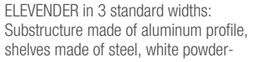

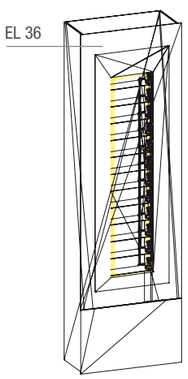

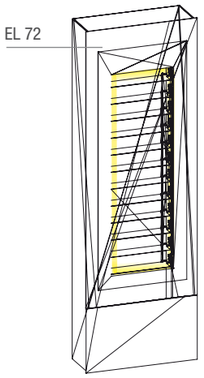

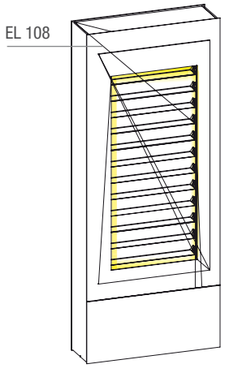

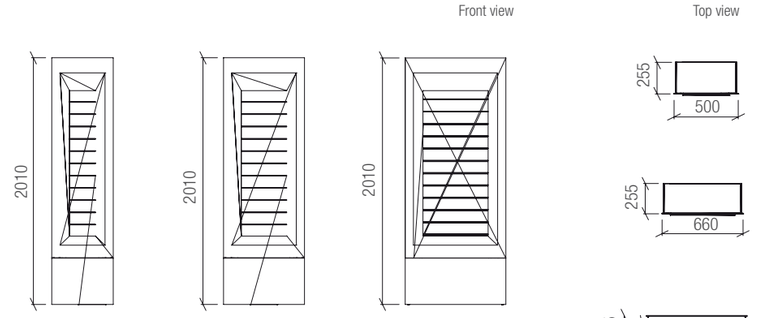

02

Cover flap for output hopper with electronical lock

for EL 36
206 x 10 x 96 mm 53.01.50.00

for EL 72
366 x 10 x 96 mm 53.01.70.00

for EL 108
526 x 10 x 96 mm 53.01.90.00

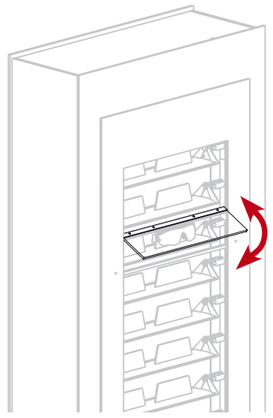

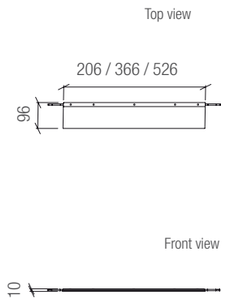

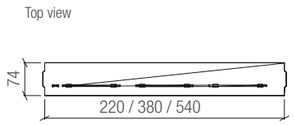

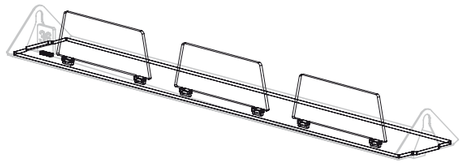

03

Insert made of acrylic glass, glossy white, with spectacle display made of acrylic glass, transparent

for EL 36

with 1 position per shelf 53.02.50.00

for EL 72

with 2 positions per shelf 53.02.70.00

for EL 108

with 3 positions per shelf 53.02.90.00

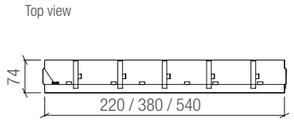

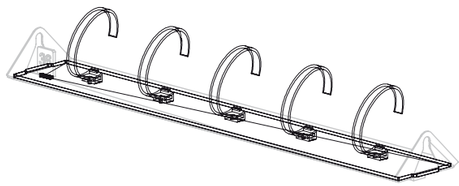

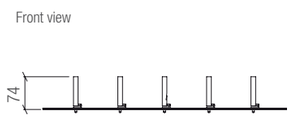

04

Insert made of acrylic glass, glossy white, with clips for watches made of plastics

for EL 36

with 2 positions per shelf 53.03.50.00

for EL 72

with 4 positions per shelf 53.03.70.00

for EL 108

with 5 positions per shelf 53.03.90.00

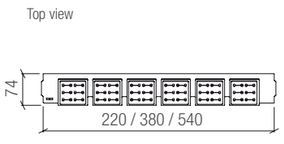

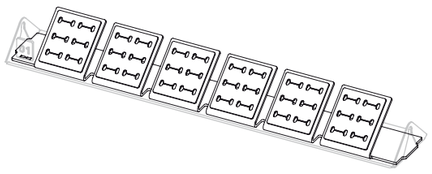

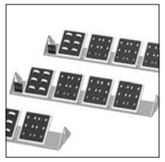

05

Insert made of acrylic glass, glossy white, with display for rings, made of acrylic glass, glossy white, with sponge rubber

for EL 36

with 12 positions per shelf 53.04.50.00

for EL 72

with 24 positions per shelf 53.04.70.00

for EL 108

with 36 positions per shelf 53.04.90.00

ELEVENDER & SMART SELECT

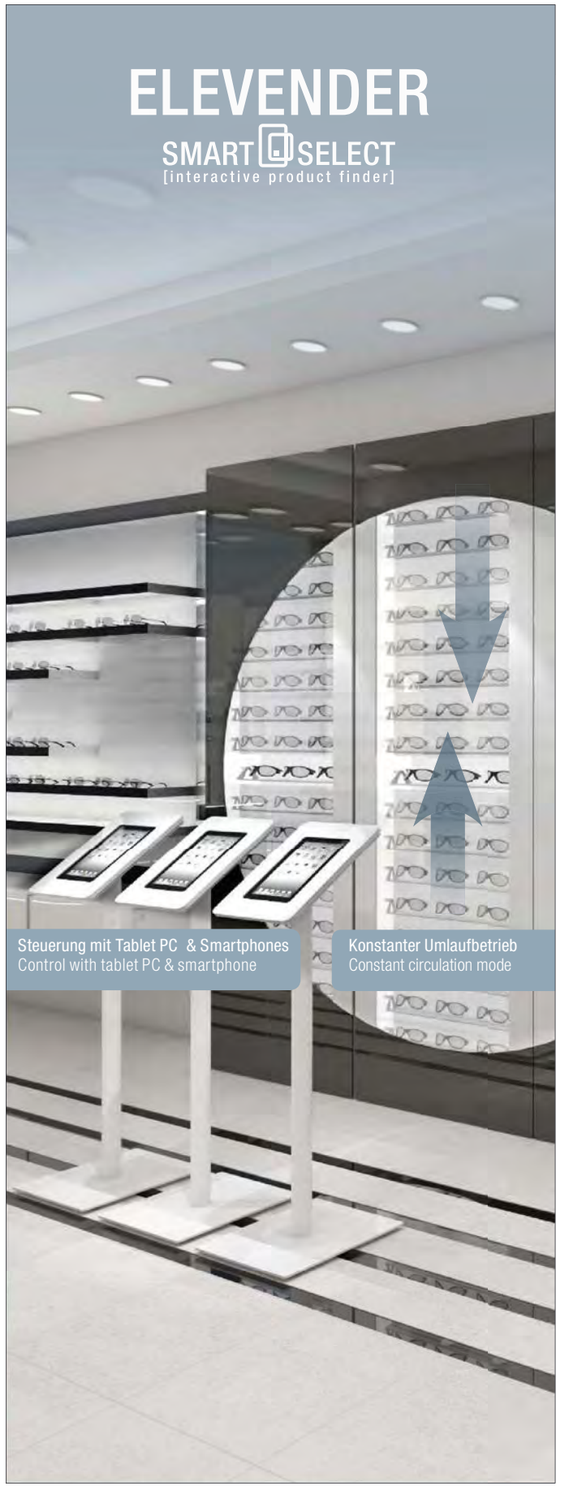

CNS Displays presents the next generation of interactive displays and shop concepts which provides an optimum presentation of merchandise with full product information and control by tablet PCs and smartphones.
In times of high competition and growing online trading, we offer the perfect solution for an effective synthesis of local shops and informati-on increasingly available virtually.

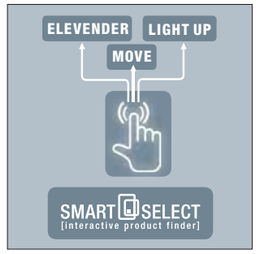

SMART SELECT:
sentation of merchandise with full product information and control by tablet PCs and smartphones

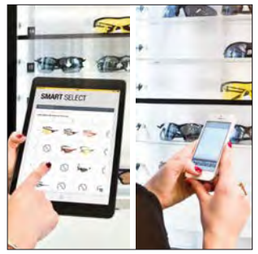

Controlling the display and full product information is provided by using tablet PCs and smart-phones

1.
Activation of presentation

2.
Select search mode

3.
Configurate the product assistant by yourself

4.
Overview of search results

5.
Product details & selection

3.
Overview of all available products

oder
or

4.
Enter a search term directly

5.
Product details & selection

The intelligent software SMART SELECT controls not only the presentation systems, but provides also a number of promotional benefits:

- The customers have the opportunity to inform themselves completely and to get additional advice if necessary. The result is an optimal customer service with well-directed use of sales staff.
- Direct evaluation of the selection criteria: The retailer knows exactly what the customers want and how to align the offer for them.
- In the future, customers could order 24/7 via window-shopping or ask for more information or contacting!
- Thanks to the tablet PC or smartphone, the manufacturers' information is always available, because the data is located on a web server („cloud") which can be managed centrally.
- Due to the reporting software the retailers can optimize their ordering and warehousing.

Selecting the right product by direct search or product assistant!

with tablet PC …

1 Select the product information individually

2 The selected products board moves to the cerving window

3 The product can now be taken out for fitting

... or smartphone

4 The own smartphone can be used for product information

5 Scan the QR code and open the web link or the App

6 Request product details and navigate ELEVENDER directly

The products presented in the ELEVENDER are constantly in motion on the principle of a paternoster.

1. By using a tablet PC, product information can be selected individually and single goods can be chosen specifically. Also the shelves are marked with numbers to find them directly in the tablet PC.
2. The ELEVENDER moves the shelf with the selected product to the output hopper and stops there.
3. Now the merchandise can be taken out for try-on / final choice.
4. Controlling the ELEVENDER is not only possible by tablets installed in the store, customers may also use their own smartphones.
5. The user scans with a standard QR code reader on his own smartphone the installed QR code and opens the embedded link.
6. On the smartphone display the same navigation as on the tablet PC is shown. The client can browse through the product information as well as control the ELEVENDER directly - perfect for targeted customer contacts 7 days a week, 24 h per day!

WATCHES

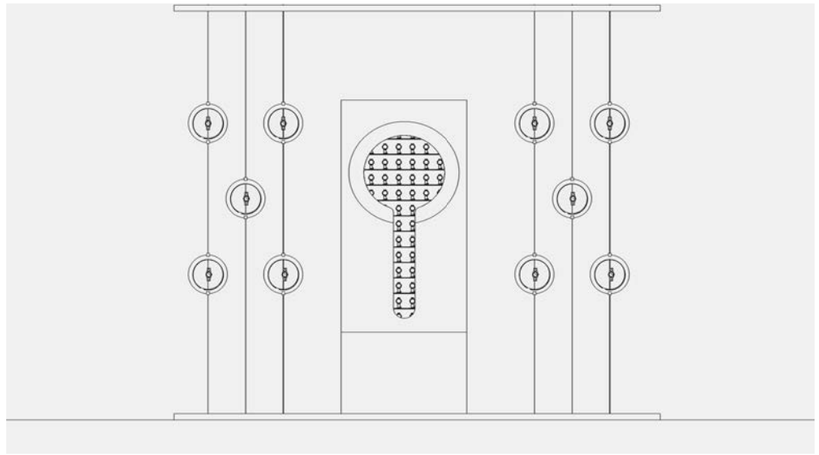

WATCHES

OPTICS

Fields of application

- OPTICS
- WATCHES
- JEWELLERY
- FRAGRANCES + COSMETICS
- MOBILE PHONING
- SPORTS

ELEVENDER

Fields of application

- OPTICS
- WATCHES
- JEWELLERY
- FRAGRANCES + COSMETICS
- MOBILE PHONING
- SPORTS

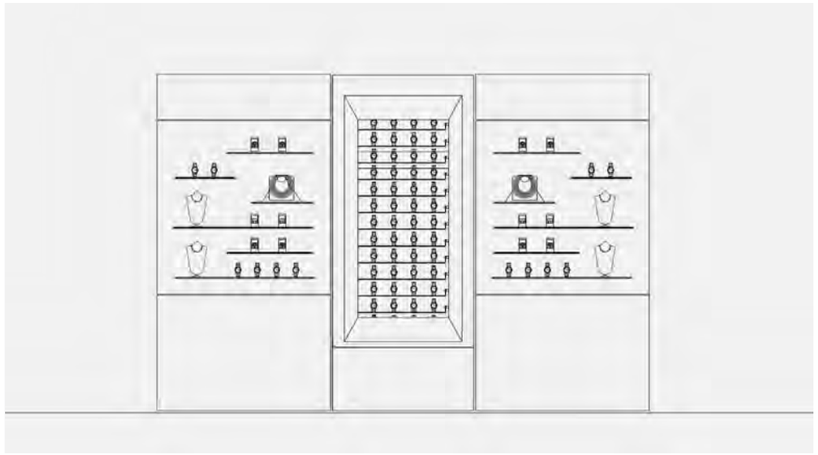

WATCHES JEWELLERY

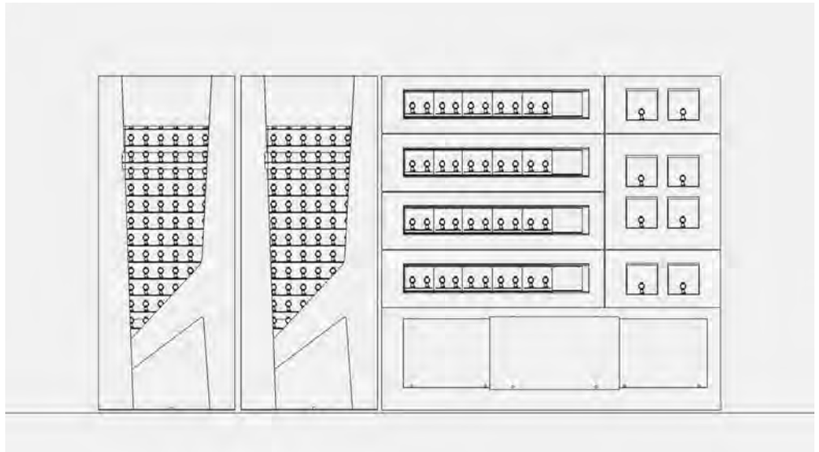

WATCHES

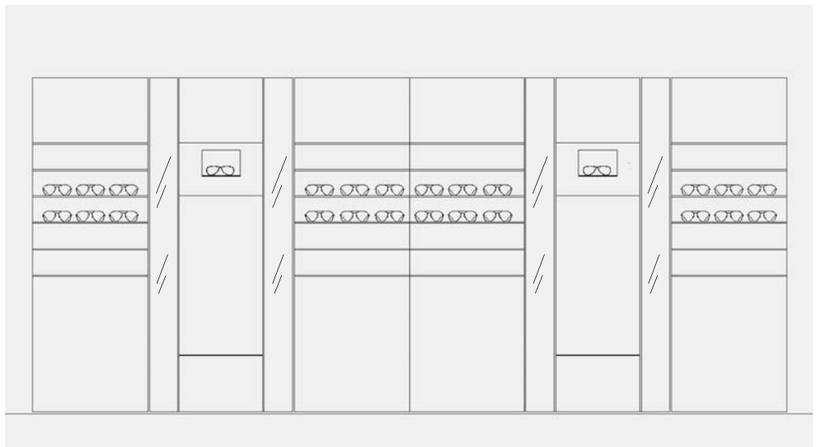

OPTICS

SERVICE

SERVICE

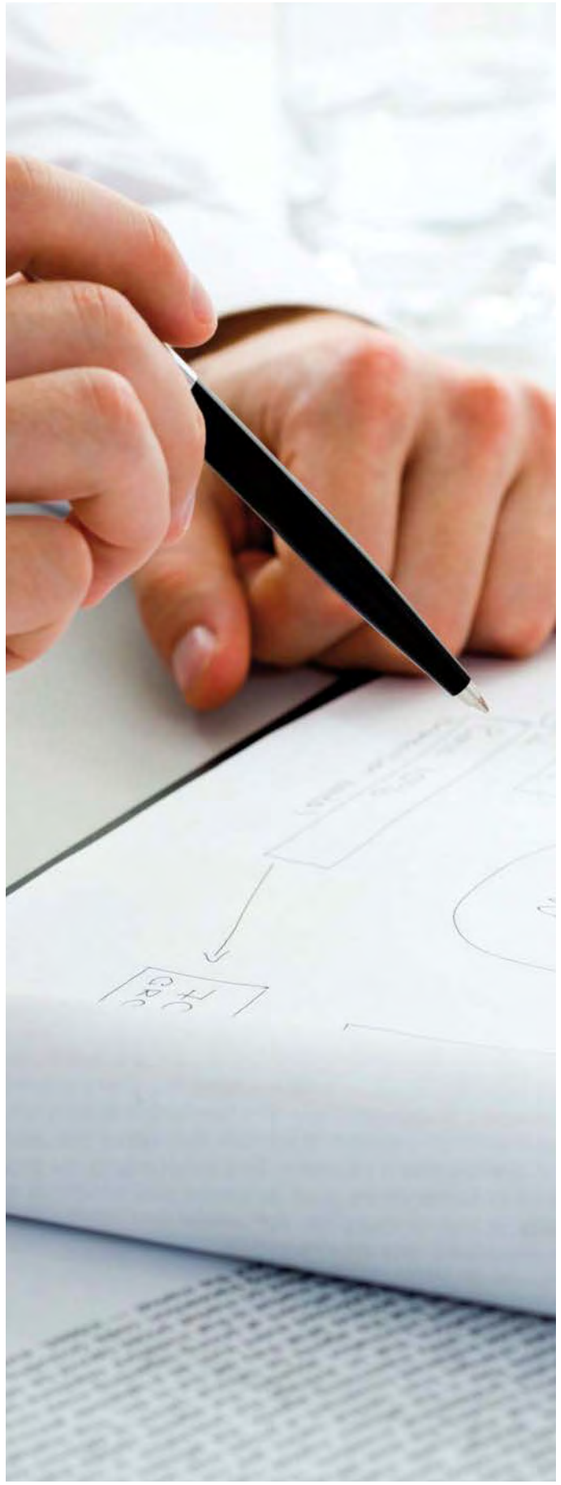

SERVICE WORLDWIDE

Thanks to sophisticated display modules and fitting elements the advantages of CNS Displays are short planning and execution time, cost-effective realization and price transparency. Design, quality and function bear comparison with the highest demands. Optimal precondi-tions for the best possible result, for customer satisfaction is our primary objective.
On national and international trade fairs we demonstrate in an impressive way why we are on top of the global market. A wide net of distributors all over the world guarantees the on-site service as well as consultation in the respective language.

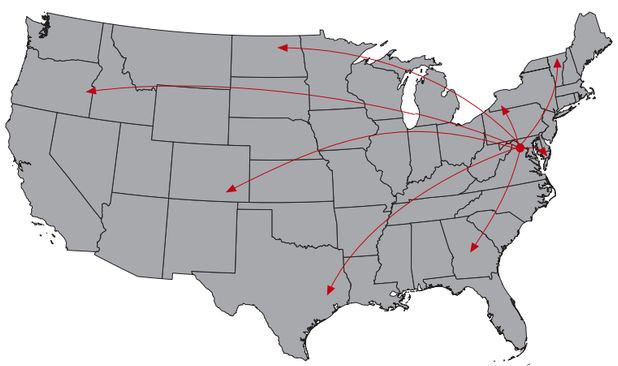

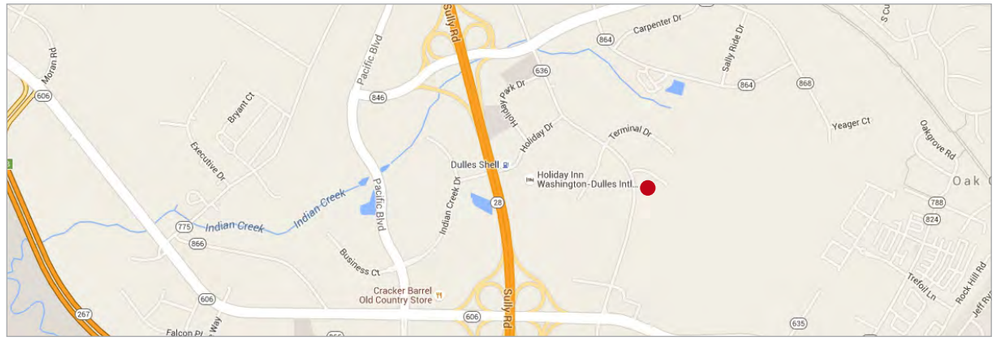

Our showroom even offers more room for ideas: Get inspired! Discover top news, trends and ideas in the field of shop design and merchandise display on more than 600 m²! The CNS Displays team is looking forward to your visit!

BRANDED DISPLAYS

Optimize your brand's perception at the point of sale! Customized displays create a unique branding and achieve a high brand recognition. Due to our experience for years we are your perfect partner when it comes to develop individual solutions. CNS Displays provides everything as a turn-key-solution: consulting, draft, design, prototype and production.

"At our unique exchange system "switch it" all components can be replaced, therefor we need an exceptional presentation. Together with the professional team, we have found the optimal solution and realized great displays with a high recognition value. That way our products are promoted perfectly!"

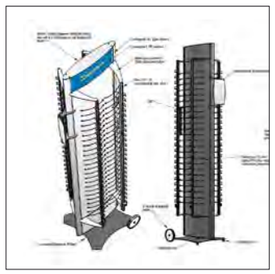

1. Consulting

In order to determine your display requirements we are working closely with you. By doing that the best possible result can be achieved.

2. Draft

Based on your requests our designer team develops customized displays, mirrors and accessories. Within shortest time you will receive appropriate drafts with the corresponding quotation.

3. Design

Drafts and photo-realistic designs are the basis to define the materials and our competent and well-experienced engineers take care of a detailed elaboration.

4. Prototype

The prototype offers the opportunity to check functions and designs closely and realize requested changes. Only when the display meets exactly your requirements, we start serial production.

ADDITIONAL DETAILS

PRODUCTION

Our suppliers are carefully selected so that we can guarantee the quality of all parts. With our efficient machinery and staff we can ensure fast production and the quantity produced in each batch set to match your needs.

INSTALLATION

You can easily and quickly mount the products yourself. The mounting instructions are enclosed to each delivery and are available furthermore on our homepage as a download. If necessary our team will be pleased to complete the mounting for you.

MAINSS UPPLY

Network supplied products by concept-s are developed for the European market (230V/50Hz). However, most of them can be adjusted to international standard (100-240V/50-60Hz) on request.

a) Acrylic glass, high-gloss

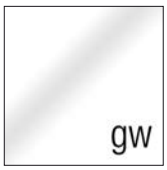

glossy white

glossy black

glossy red

We offer a high-quality selection of acrylic glass panels in a thickness of 3 – 8 mm (depending on module). The acrylic glasses are available in different colourings, partially with satined surfaces and therefore especially suitable for backlight.

b) Acrylic glass, translucent

polarwhite

dualsatin

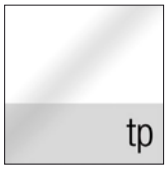

transparent

All dimensions are given in millimetres (mm), if not indicated in a different way.

1 mm = 0.03937 inch
1 inch = 25,4 mm

TIMELESS

STURDY

PROMOTE SALES

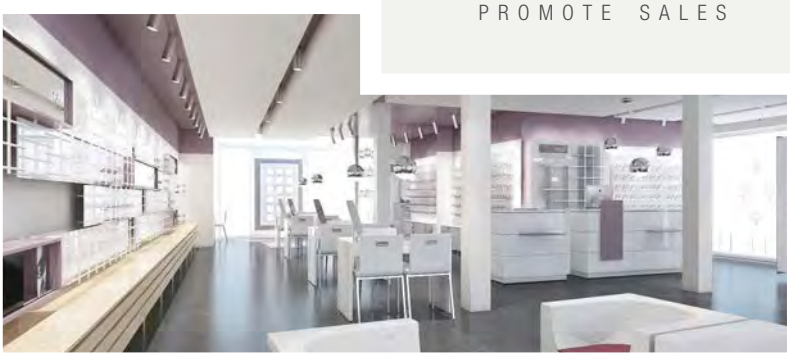

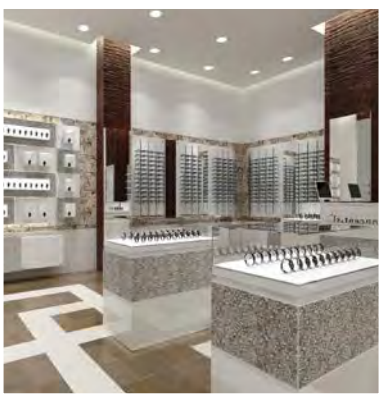

COMBINABILITY

COMPATIBILITY

FUNCTIONAL

CNS DISPLAYS

[concept·s]®

www.cnsdisplays.com

22821 Silverbrook Center Dr.
Suite 140
Sterling, VA 20166
USA

877-274-9300
Int'l: +1-703-435-7770
Fax: 703-435-3180
info@cnsdisplays.com