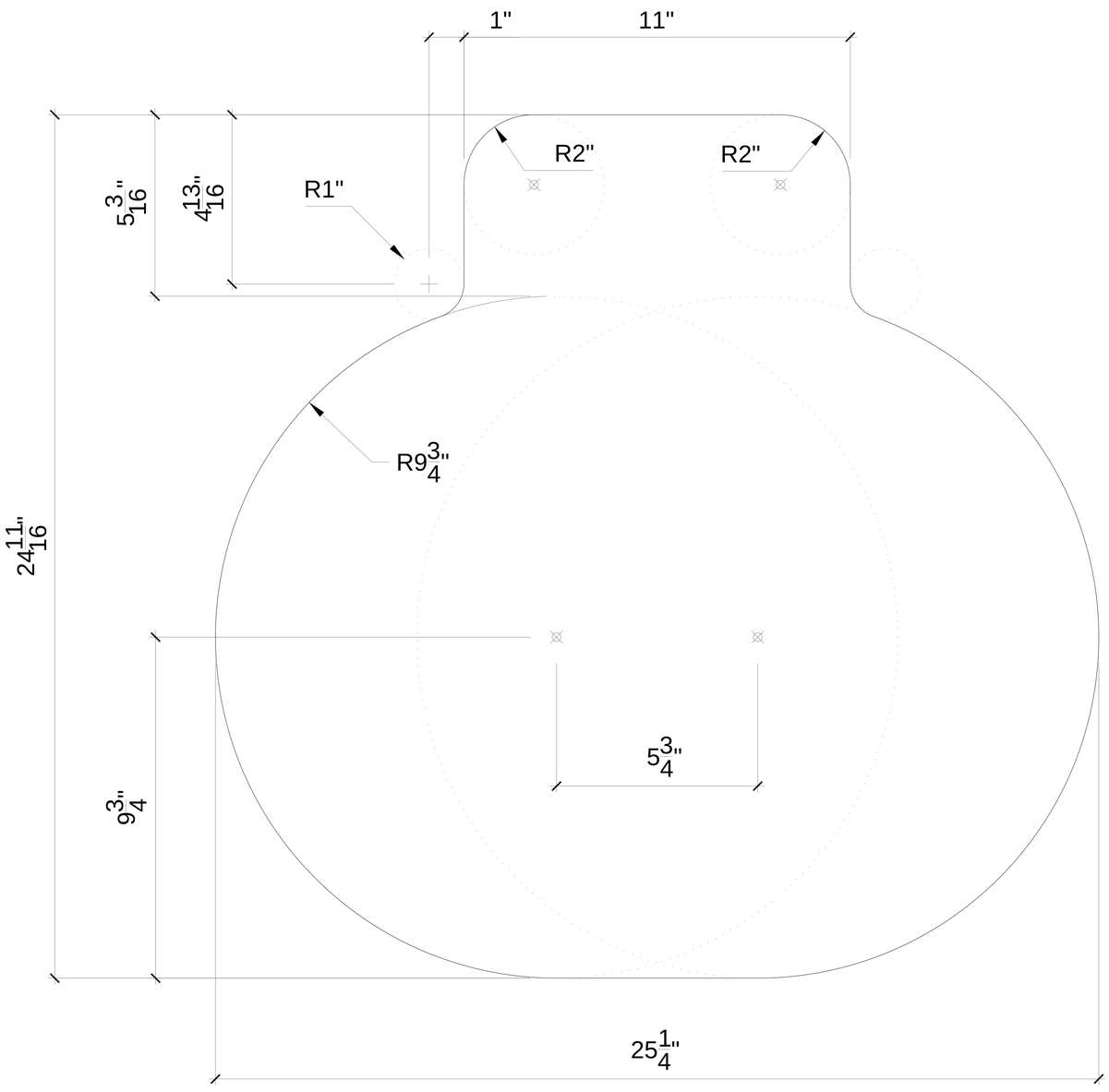

FIG. A - PLAN VIEW CUT-OUT

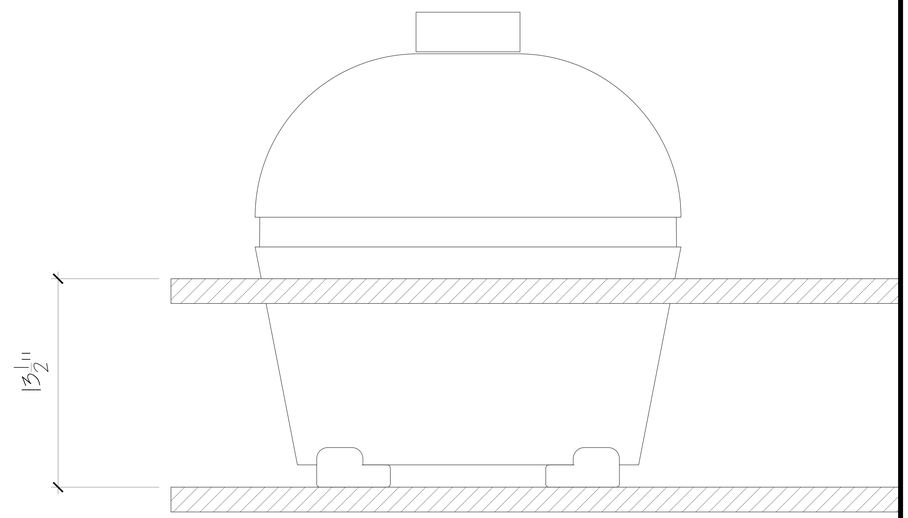

FIG. B - ELEVATION - HT. FROM TOP SURFACE TO SUPPORTING SHELF

TO HAVE THE LIP OF GRILL LOWER TO THE COUNTERTOP SURFACE USE THE TEMPLATE WITH THE HINGE NOTCH

Primo GRILLS AND SMOKERS
3289 Montreal Industrial Way
Tucker, GA 30084

PRIMO OVAL LG
CUT-OUT DIMENSIONS WITH HINGE NOTCH

DATE	06.13.2013
REVISIONS	
DATE	11.06.2017
SCALE	SCALE – AS SHOWN
JOB NO.	DRAWN BY G L W

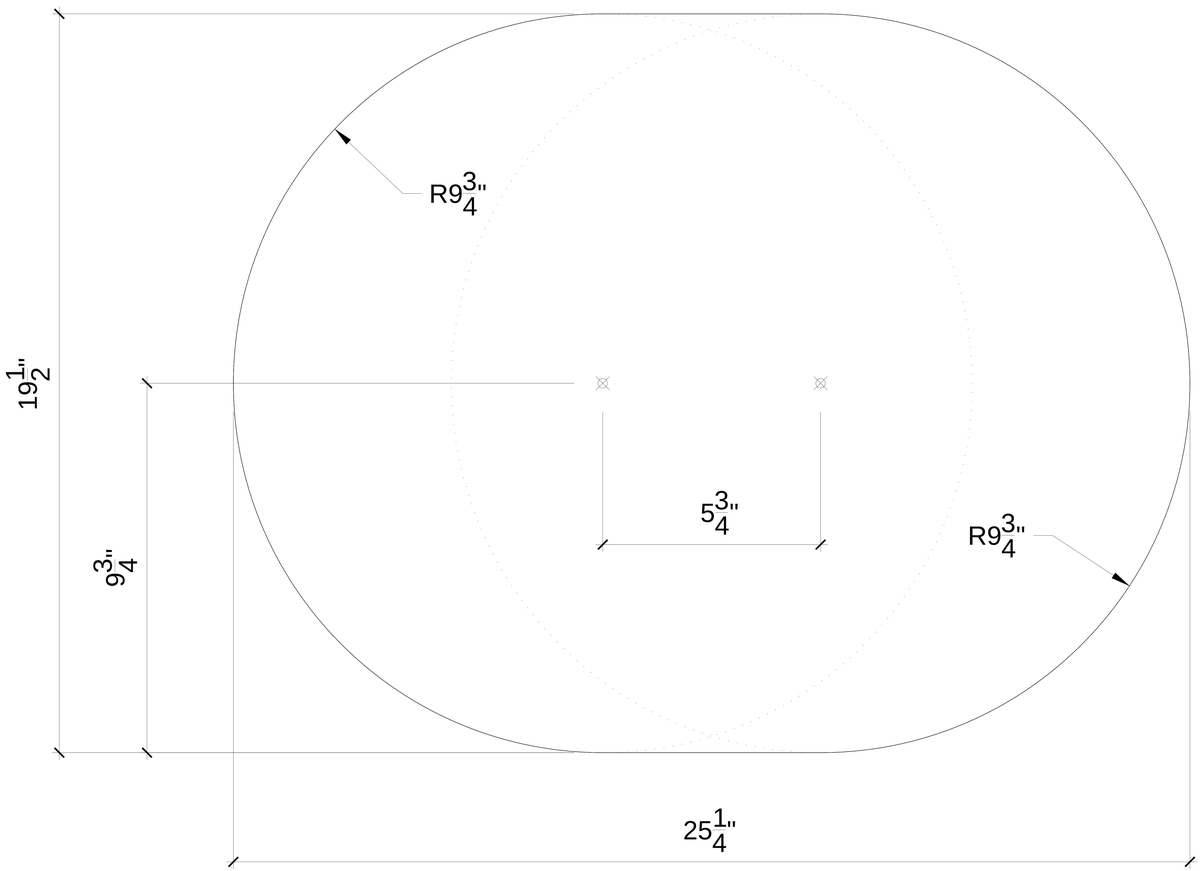

FIG. A - PLAN VIEW CUT-OUT

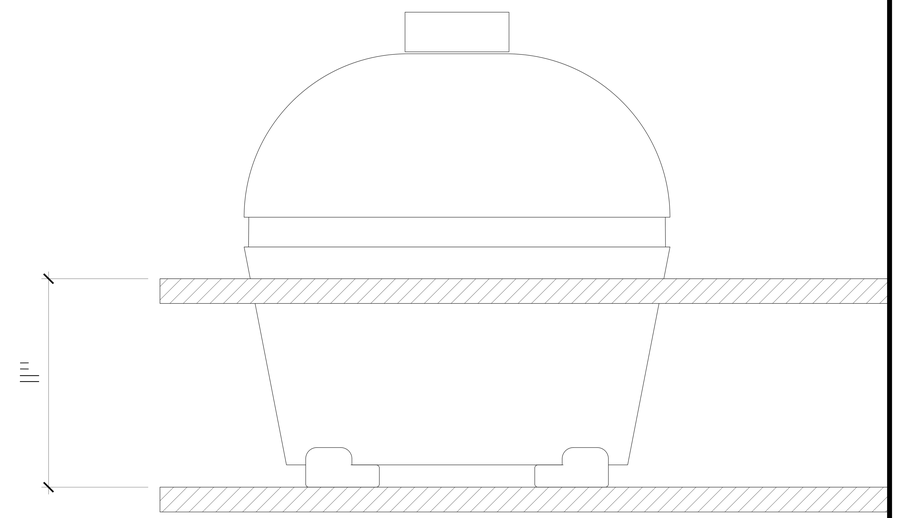

FIG. B - ELEVATION - HT. FROM TOP SURFACE TO SUPPORTING SHELF

Primo GRILLS AND SMOKERS
3289 Montreal Industrial Way
Tucker, GA 30084

PRIMO OVAL LG
CUT-OUT DIMENSIONS
WITHOUT HINGE NOTCH

DATE	06.13.2013
REVISIONS	
DATE	11.06.2017
SCALE	SCALE – AS SHOWN
JOB NO.	DRAWN BY G L W