Honeywell

IS3050A Passive Infrared Motion Sensor with Anti-Mask – Quick Installation Guide
Détecteur de mouvement â infrarouge passif avec Anti-masque IS3050A – Guide d'installation rapide
Sensor de Movimiento Pasivo Infrarrojo con Antienmascarmiento IS3050A – Guía Rápida de Instalación
Sensor de Movimento infravermelho passivo com Anti-máscara IS3050A – Guia rápido de instalação

1

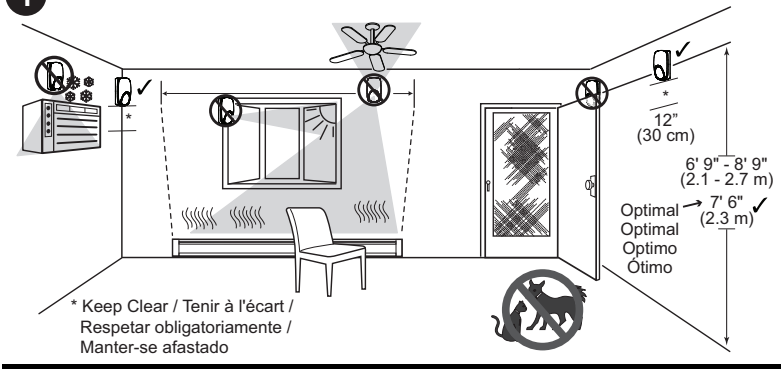

2

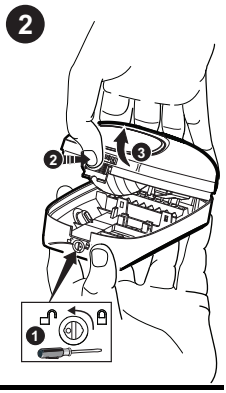

3

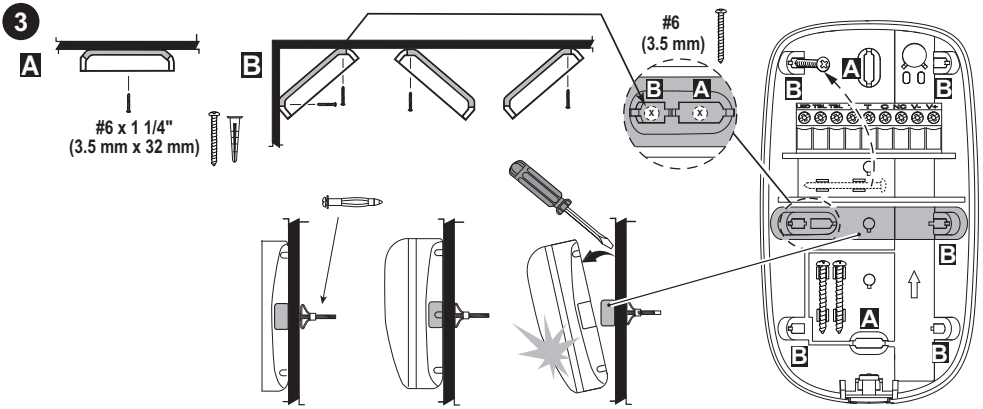

4

Internal EOL Resistor DIP Switches
Résistance interne EOL commutateur DIP
Interruptores DIP Resistencias internas EOL
DIP Switches Resistores internos EOL

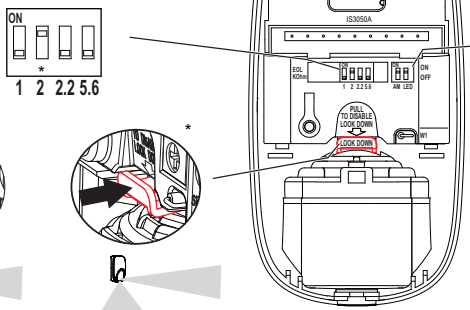

Enabled
Activé
Habilitado
Habilitado

Anti-mask
Anti-masque
Antienmascaramiento
Anti-máscara

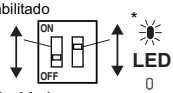

***Disabled**
***Désactivé**
***Deshabilitado**
***Deshabilitado**

* Factory default / Réglage usine / Defecto de fábrica / Padrão de fábrica

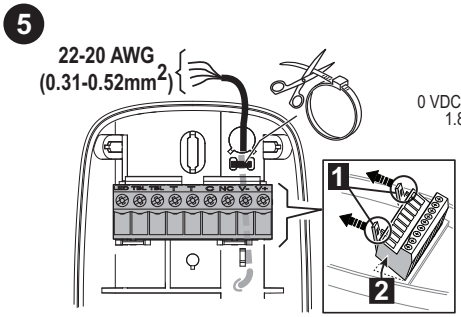

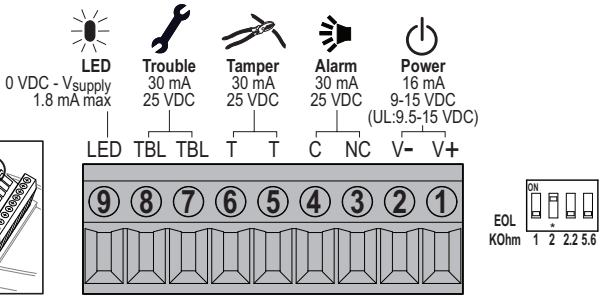

WIRING EXAMPLES / EXEMPLES DE CÂBLAGE / EJEMPLOS DE CABLEADO / EXEMPLOS DE CABEAMENTO

To connect all three outputs (sensor alarm, tamper and trouble/anti-mask) to one zone input: All alarm, tamper and trouble/anti-mask events are “alarms” when the system is armed or “fault” when disarmed.

Pour brancher les trois sorties (alarme de capteur, sabotage et défectuosité/anti-masque) sur une entrée de zone : Toutes les activités d’alarme, de sabotage de défectuosité/anti-masque sont des « alarmes » quand le système est armé ou des « violations » quand il est désarmé.

Para conectar las tres salidas (alarma del sensor, sabotaje y problemas / anti-máscara) a una entrada de zona: Todos los eventos de alarma, sabotaje y problema / anti-máscara son "alarmas" cuando el sistema está armado o "falla" cuando está desarmado.

Para conectar as três saídas (alarme de sensor, tamper e problema / anti-máscara) a uma entrada de zona: Todos os eventos de alarme, tamper e problema / anti-máscara são "alarmes" quando o sistema estiver armado ou "falha" se estiver desarmado.

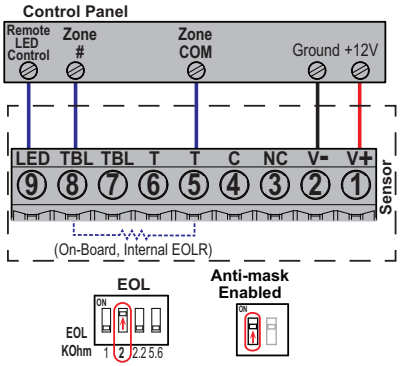

Note: A masking condition can occur when blocking or reflective material is placed in front of the sensor. Keep 12” (30cm) in front of the sensor clear.

Remarque : Une condition de masquage peut se produire quand du matériel bloquant ou réfléchissant est placé devant le capteur. Gardez un espace libre de 30 cm (12 po) devant le capteur.

Nota: Una condición de enmascaramiento puede ocurrir si se coloca frente al sensor algún objeto que bloquee o refleje. Guarde una distancia de 30cm (12”) frente al sensor.

Nota: Uma condição de mascaramento pode ocorrer quando se um material reflector ou que bloqueia é colocado em frente do sensor. Mantenha uma distância de 30 centímetros (12 ") em frente do sensor.

To connect the sensor alarm output to one zone input and the tamper and trouble/anti-mask outputs to a second zone input: The alarm relay is wired to one zone; the tamper and trouble/anti-mask are wired to another zone; the control panel differentiates alarm conditions from tamper and trouble/anti-mask conditions.

Pour brancher la sortie d’alarme du capteur sur une entrée de zone et les sorties de sabotage et de défectuosité/anti-masque sur une deuxième entrée de zone : Le relais d’alarme est branché sur une zone; le sabotage/anti-masque est branché sur une autre zone; le panneau de commande différencie les conditions d’alarme des conditions de sabotage et de défectuosité/anti-masque.

Para conectar la salida de alarma del sensor a una entrada de zona y las salidas de tamper y problema / anti-máscara a una segunda entrada de zona: El relé de alarma está conectado a una zona, el de tamper y problema / anti-máscara a otra zona: el panel de control distingue las condiciones de alarma de tamper y las de problema / anti-máscara.

Para conectar a saída de alarme de sensor a uma entrada de zona e as saídas de tamper e problema / anti-máscara a uma segunda entrada de zona: O relay de alarme é ligado a uma zona, tamper e problema / anti-máscara são ligados a uma outra zona; o painel de controle diferencia as condições de alarme de tamper e as condições problema / anti-máscara.

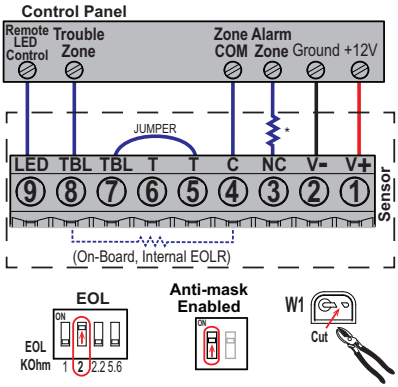

* Off-Board, External EOLR (Not supplied), install inside the sensor housing.

To connect the sensor alarm, tamper and trouble/anti-mask outputs to three separate zone inputs: The alarm, tamper and trouble/anti-mask are each wired to a separate zone; the control panel differentiates alarm, tamper and trouble/anti-mask conditions.

Pour brancher les sorties d'alarme de capteur, de sabotage et de défectuosité/anti-masque sur trois entrées de zone séparées : L'alarme, le sabotage et défectuosité/anti-masque sont branchés sur une zone séparée; le panneau de commande différencie les conditions d'alarme de sabotage et de défectuosité/anti-masque.

Para conectar el sensor de alarma, tamper y salidas de problema / anti-máscara con tres entradas de zona separadas: Las alarmas, sabotaje y problema / anti-máscara están cada uno conectado a una zona separada, el panel de control distingue las condiciones de alarma, problemas y sabotaje / anti-máscara.

Para ligar o alarme de sensor, tamper e saídas de problema / anti-máscara a três entradas de zona separadas: Os alarmes, tamper e problema / anti-máscara são cada uma ligada a uma zona separada, o painel de controle diferencia as condições de alarme, tamper e problema / anti-máscara.

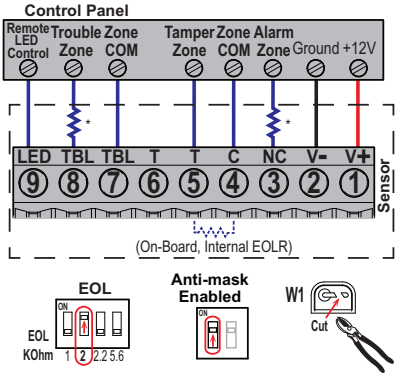

* Off-Board, External EOLR (Not supplied), install inside the sensor housing.

6

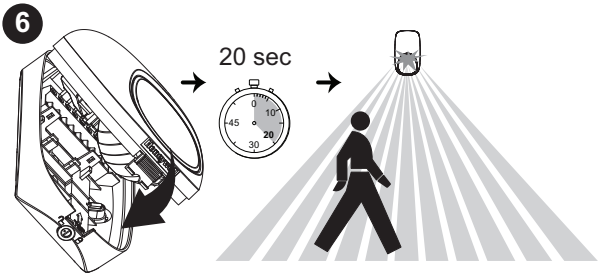

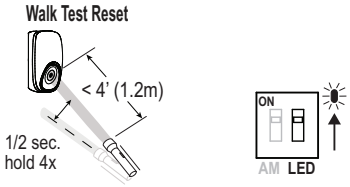

LED	Power Up	Walk Test	Normal	Fault	Anti-Mask
Red	Slow Blink	ON Alarm	ON Alarm	Fast Blink	OFF
Yellow	OFF	OFF	OFF	OFF	Fast Blink

1. Close the sensor and apply power to the sensor. Initialization is complete when the LED stops flashing slowly (about 20 seconds).
2. Walk through the detection area and observe the LED.

Walk test mode is active for 10 minutes, then automatically exits test mode, disables the LED and enters normal operation mode. For an additional 10 minute walk test, enable Walk Test mode again with the flashlight feature (see Walk Test Reset above).

Note: During power up and walk test modes the LED is active regardless of the LED Enable/Disable DIP switch setting.

7

Top View
Vue de dessus
Vista Desde Arriba
Vista Superior

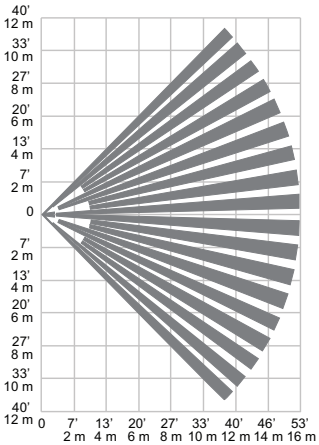

PLAN VIEW
ALL ZONES

Side View
Vue de coté
Vista Lateral
Vista Lateral

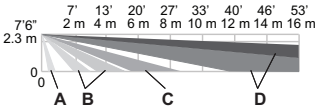

Zones / Zones / Zonas / Zonas

A	2	Look-down / Basses / Vista Zona 0 / Vigilância inferior
B	12	Lower / Courtes / Cercana/ Mais baixas
C	10	Intermediate / Intermédiaires / Intermedia / Intermédias
D	36	Long / Longues / Largo Alcance / Longo alcance

SPECIFICATIONS:

Operating Temperature: 14° to 131° F / -10° to 55° C
Relative Humidity: 5 to 93% (UL tested at 93%); non-condensing

TROUBLESHOOTING:

	NORMAL	TROUBLE*		
		Mask[1]	Low Voltage[2]	Self-Test Failure[3]
Alarm Relay	Closed	Open	Closed	Closed
Trouble Relay	Closed	Open	Open	Open
Red LED	Off	Off	Off	Flashing
Yellow LED	Off	Flashing	Off	Off

***TROUBLE CONDITIONS:**
[1] Mask condition: Sensor IR window is blocked or masked.
[2] Low Voltage: The sensor is disabled. [Note: If voltage drops below 7.9V, the Trouble relay will open.]
[3] Self-Test Failure conditions:
- PIR self-test failure: The sensor is disabled.
- Temperature compensation failure: The temperature compensation is disabled.

Depending on the Trouble condition, take the following corrective actions:
- Verify the sensor is not blocked or masked.
- Verify the power supply is sufficient (at least 9V at the sensor).
- Cycle power to the sensor.
- Walk test the sensor.

If the Trouble condition does not clear, replace the sensor.

APPROVAL/ LISTINGS:

- FCC part 15, Class B verified
- IC ICES-003, Class B verified
- UL 639
- ULC S306-03
- SIA-PIR-01 Passive Infrared detector standard features for false alarm immunity.

Product must be tested at least once each year / Le fonctionnement du produit doit être vérifié au moins une fois par année / El producto debe ser probado al menos una vez al año / O produto deve ser testado pelo menos uma vez por ano

All wiring must be in accordance with: the National Electrical Code (ANSI/NFPA70); the Canadian Electrical Code, Part I (where applicable); UL681, Standard for Installation and Classification of Burglar and Holdup Alarm Systems; ULC-S302, Standard for Installation and Classification of Burglar Alarm Systems for Financial and Commercial Premises, Safes and Vaults; ULC-S310, Standard for Installation and Classification of Residential Burglar Alarm Systems; local codes and the authorities having jurisdiction.

The products are intended to be powered by a power-limited output of a UL/CUL Listed Burglar Alarm control unit, or via a Listed UL603/ULC-S318 power-limited power supply that provides 4 hours of standby power.

The sensor must be mounted indoors, within the protected premises, and on a wooden stud, solid wood or with a robust wall anchor.

UL Notes: All interconnecting devices must be UL listed. The anti-mask feature has not been evaluated by UL.

FEDERAL COMMUNICATIONS COMMISSION STATEMENTS
The user shall not make any changes or modifications to the equipment unless authorized by the Installation Instructions or User's Manual. Unauthorized changes or modifications could void the user's authority to operate the equipment.

CLASS B DIGITAL DEVICE STATEMENT
This equipment has been tested to FCC requirements and has been found acceptable for use. The FCC requires the following statement for your information:

This equipment generates and uses radio frequency energy and if not installed and used properly, that is, in strict accordance with the manufacturer's instructions, may cause interference to radio and television reception. It has been type tested and found to comply with the limits for a Class B computing device in accordance with the specifications in Part 15 of FCC Rules, which are designed to provide reasonable protection against such interference in a residential installation. However, there is no guarantee that interference will not occur in a particular installation. If this equipment does cause interference to radio or television reception, which can be determined by turning the equipment off and on, the user is encouraged to try to correct the interference by one or more of the following measures:
- Reorient the receiving antenna until interference is reduced or eliminated.
- Move the radio or television receiver away from the receiver/control.
- Move the antenna leads away from any wire runs to the receiver/control.
- Plug the receiver/control into a different outlet so that it and the radio or television receiver are on different branch circuits.
- Consult the dealer or an experienced radio/TV technician for help.

INDUSTRY CANADA CLASS B STATEMENT
This Class B digital apparatus complies with Canadian ICES-003.
Cet appareil numérique de la classe B est conforme à la norme NMB-003 du Canada.

FCC / IC STATEMENT
This device complies with Part 15 of the FCC Rules, and RSS210 of Industry Canada. Operation is subject to the following two conditions: (1) This device may not cause harmful interference, and (2) This device must accept any interference received, including interference that may cause undesired operation.

Cet appareil est conforme à la partie 15 des règles de la FCC & de RSS 210 des Industries Canada. Son fonctionnement est soumis aux conditions suivantes: (1) Cet appareil ne doit pas causer d'interférences nuisibles. (2) Cet appareil doit accepter toute interférence reçue y compris les interférences causant une réception indésirable.

For the latest documentation and online support information, please go to:
Pour de l'assistance en ligne, visitez :
Para recibir soporte en línea, visite:
Para qualquer informação adicional, contacte:

http://www.security.honeywell.com/hsc/resources/MyWebTech/

To protect the environment, a detailed installation guide is available on the Honeywell website – Please consider before printing the document!

For the latest U.S. warranty information, please go to: www.honeywell.com/security/hsc/resources/wa or Please contact your local authorized Honeywell representative for product warranty information.
Pour obtenir de l'information sur la garantie de ce produit, veuillez communiquer avec le représentant autorisé de Honeywell de votre région.
Por favor contacte con su distribuidor Honeywell Security para información sobre la garantía del producto.
Contacte o representante autorizado Honeywell local para obter informações relativas a garantia.

© 2013 Honeywell International Inc. Honeywell and DUAL TEC are registered trademarks of Honeywell International Inc.
All other trademarks are the properties of their respective owners. All rights reserved. Made in China.

2 Corporate Center Drive, Suite 100
P.O. Box 9040, Melville, NY 11747
www.honeywell.com/security

Honeywell

P/N 800-15341 03/14 Rev C