How to wire Open gate light indicator to Patriot control board
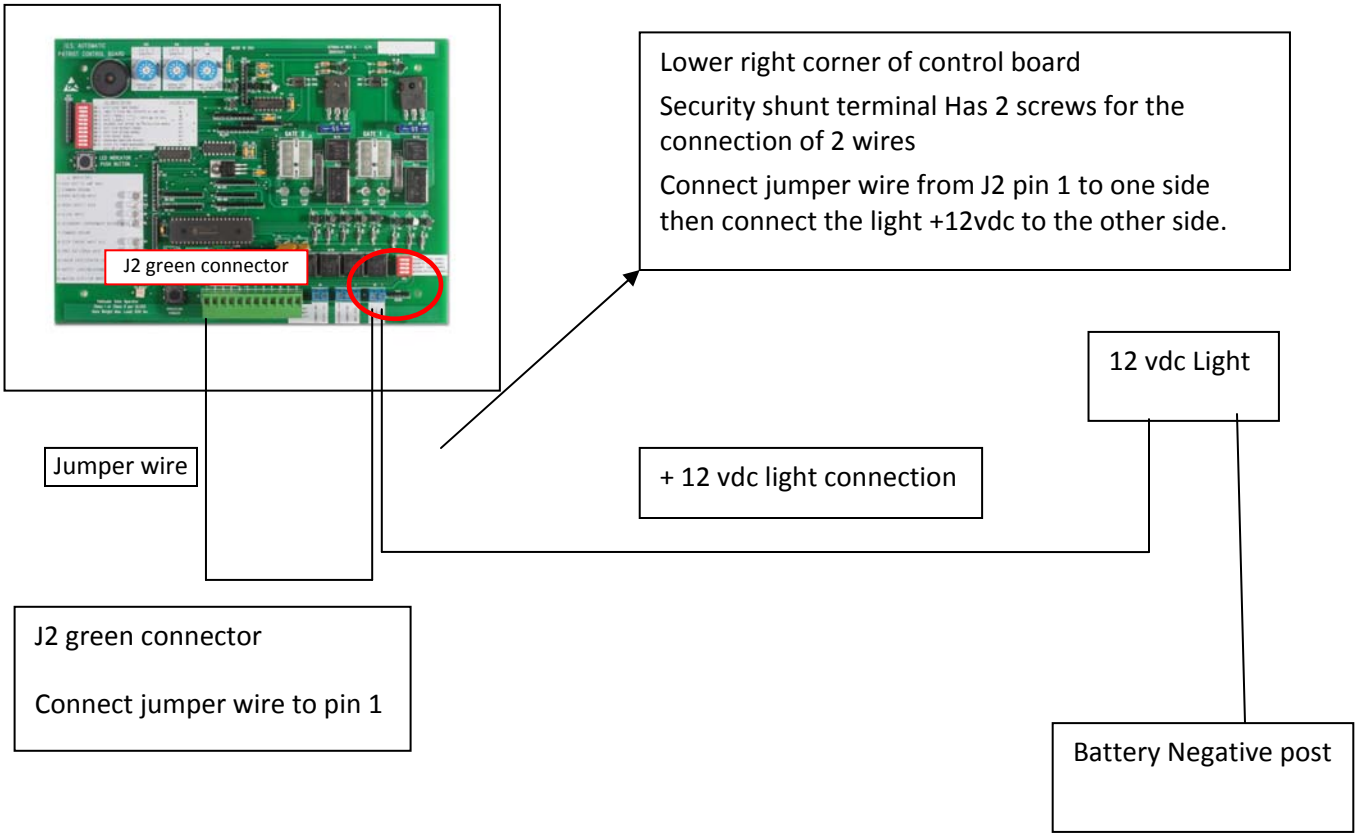
Once connected turn on the dipswitch number 3 labeled security shunt enable in the lower right corner of the control board. Dipswitch (DS2) is the small red block with 4 white switches.