DeAGOSTINI MODEL SPACE™

Red Bull Racing
FORMULA ONE TEAM

RB7

RADIO CONTROLLED • BUILD IT YOURSELF • NITRO ENGINE

Pack 6

Stages 21-24

RB7

Contents

Visit our website www.model-space.com

Editorial and design by Continuo Creative, 39-41 North Road, London N7 9DP

STEERING SLIDER OPERATION

THE STEERING OF YOUR RB7 MODEL IS EXTREMELY PRECISE THANKS TO ITS SOPHISTICATED KNUCKLE ARM LINKAGE. THIS MECHANISM ENABLES YOU TO CORNER YOUR REMOTE-CONTROLLED MODEL TO THE LIMITS OF ROADHOLDING OF THE CHASSIS AND TYRES.

The RB7 model is fitted with a sophisticated, precise knuckle arm steering system that accurately mimics its full-size counterpart. The steering mechanism of your racing car is made up of three elements: the central steering slider which controls the sideways movement; the two pivoting knuckle arms on which the front wheels are mounted; and the two adjustable track rods that link the slider to the knuckle arms.

The steering slider is mounted on a slider base that allows it to move to the left and the right. Two small

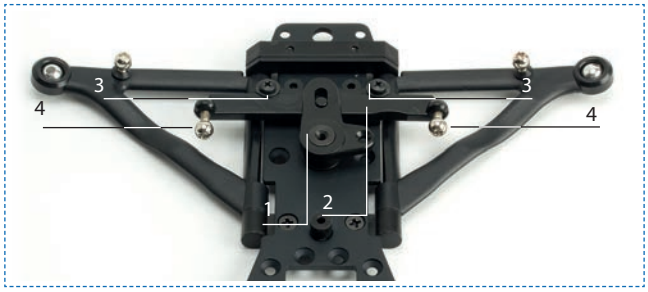

Top view of the exposed steering mechanism of your RB7 racer, with the front upper chassis and suspension removed. In the centre is the steering crank (1), which will later be connected to the steering servo via a steering rod. Turning the steering crank left and right moves the steering slider (2) in the same direction. The slider is kept in line by the steering slider base and is retained by two screws with washers (3). Later on, the two track rods (shown below) will be attached to the two pillow ball joints (4) at each end of the steering slider, conveying the sideways movement of the steering slider to the two knuckle arms.

The main components of the knuckle arm steering linkage of your RB7 racer.

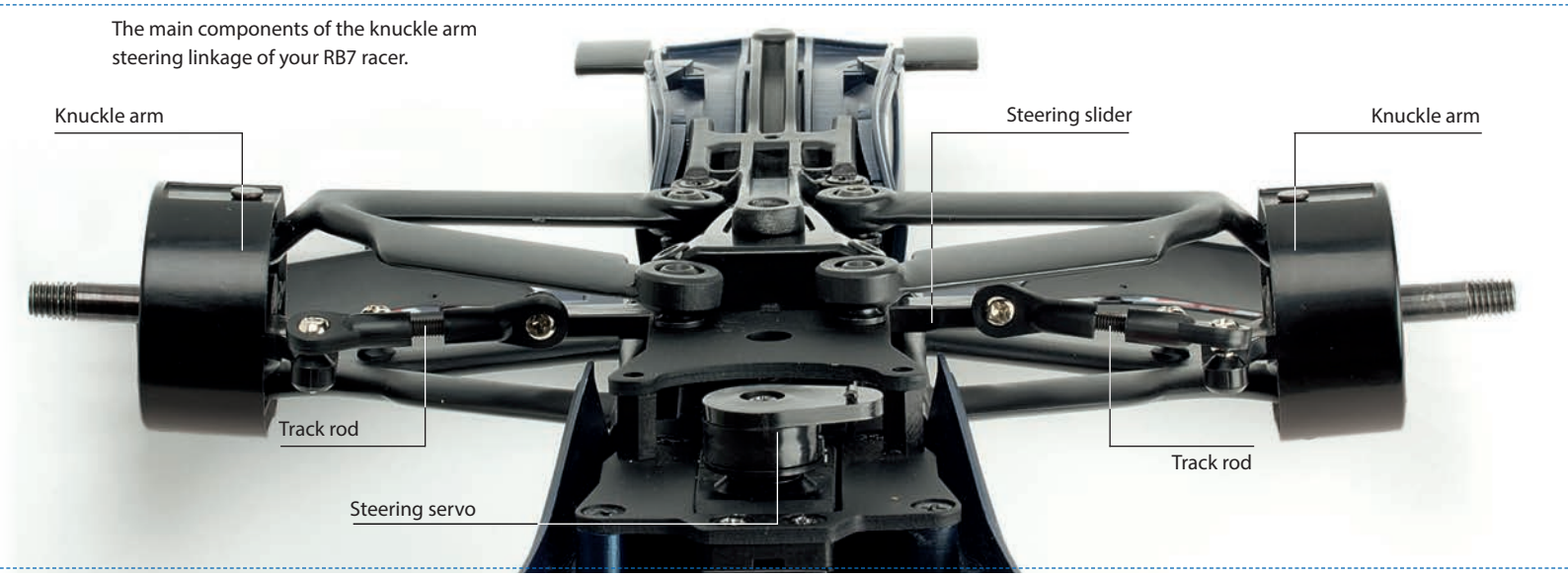

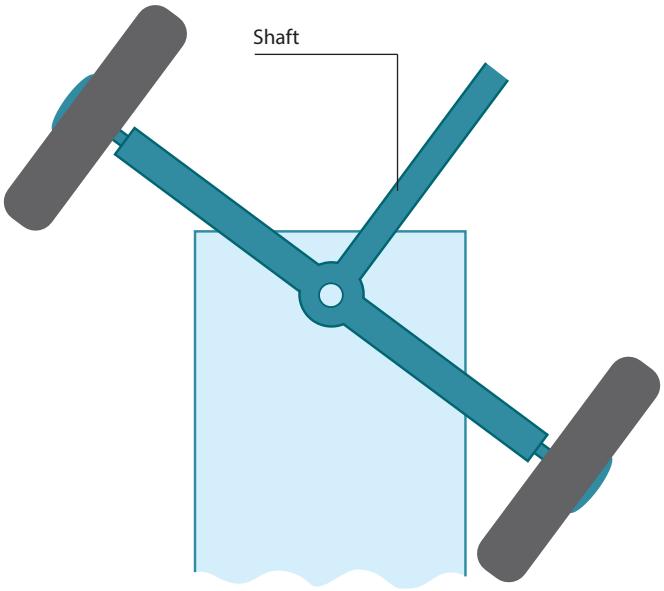

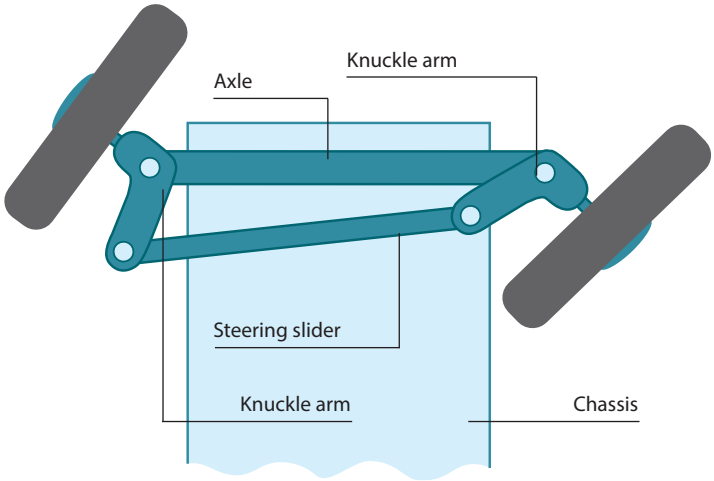

The geometry of your model's steering linkage (left, below) is designed to turn the wheels to precise angles, which is not possible with a crude pivoting axle (left, top).

Top: With pivoting axle steering of the type used on the very earliest cars, both wheels are mounted on one axle. A long steering shaft is needed to give the leverage to make the axle turn, because doing so means moving one wheel a long way forward and the other one back. The front of the chassis also has to be narrow to give the axle and wheels enough room to move.

Below: With knuckle arm steering, the axle is fixed rigidly to the chassis and only the knuckle arms at the ends are pivoted. The wheels are mounted on the knuckle arms and as the wheels move through a much smaller distance, short cranks pointing rearwards give enough leverage to turn them. The wheels are able to move to much greater angles, and as much less space is needed for the wheels to turn, the chassis can also be wider.

screws fitted with washers prevent it from jumping out of the guide. The steering slider is connected to the longer arm of the steering crank by a pin in the centre that moves along the slot in the steering crank. This converts the turning movement of the arm into a linear side-to-side movement.

Each end of the steering slider is connected to a track rod via a flexible ball joint that allows it to move freely. The track rods themselves have threaded sections used to adjust their length and set the track of the wheels. You will find out more about adjusting the steering in a later issue. Ball joints at the other ends of the track rods provide a flexible connection to the steering arms of the two steering knuckles.

The knuckle arm converts the sideways movements of the track rods back again into a turning movement. The wheel shafts fitted in the centre of the knuckle arm follow the same movement, as do the wheels that are mounted on the wheel shafts.

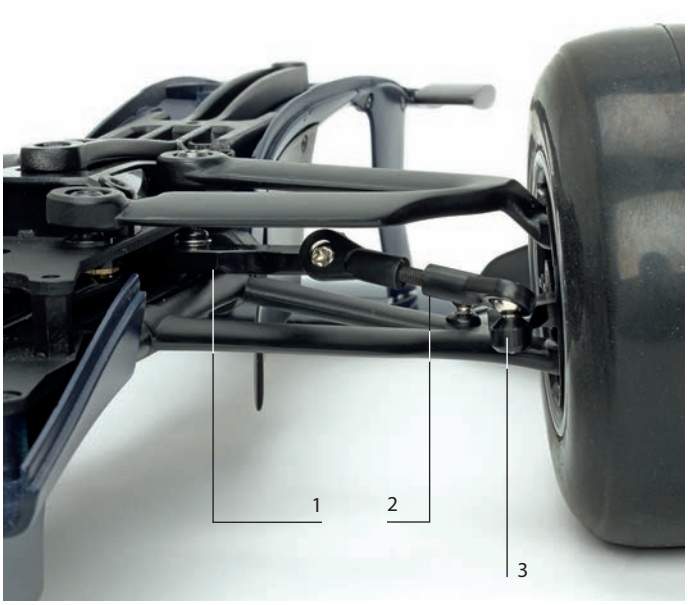

This shows the right front suspension of your RB7 racer with the steering fully turned to the left. The steering slider (1) and the track rod (2) have pushed the crank of the steering knuckle (3) to the right and angled the rear of the wheel to the outside.

The left front wheel suspension of Sebastian Vettel's Red Bull Racing RB7. You can clearly see the upper and lower wishbones (1 and 2), with the suspension pushrod (3) running diagonally upwards and the steering track rod (4) connected to the upright. The steering geometry of your model is a miniature replica of this arrangement.

PRINCIPLE OF THE KNUCKLE ARM

When you compare the knuckle arm steering system of the model with the original car, there are hardly any differences, the main ones being the size and the steering control mechanism. In a Formula 1 car, the driver moves the track rods by turning the steering wheel, but in an RC model car this function is taken over by the steering servo and its linkages.

Compared to other steering mechanisms, the knuckle arm steering system has a definite advantage: it enables the two wheels to turn to the angle of the corner without having to alter their position on the vehicle significantly. This has not always been the case. The steering of the very first motor cars was based on a simple pivoting mechanism in which the two front wheels were attached to each end of a single axle. The centre of the axle was attached to a pivot, around which it could turn, and originally was linked to a tiller like the one used to turn the rudder on a boat.

Even after the tiller was replaced by a more efficient steering wheel, this steering mechanism, which followed the operating principle of four-wheeled horse-drawn vehicles, was not really suitable for use in motor cars. Moving the entire axle and wheels required considerable effort on the part of the driver. In addition, the front of the chassis in the area of the front axle had to be very narrow so as to give the wheels and axle enough room to swing and give the car a reasonably small turning circle.

The solution was provided by the knuckle arm steering system in which the axle assembly remains fixed in its position on the chassis. The wheels are mounted on knuckle arms which are turned to the left or right by the steering box connected to the steering wheel, so moving the wheels to the appropriate angles. Because the wheels turn independently of the axle, less effort is required to steer the vehicle. Also, modern mechanisms normally use a servo-assisted steering-box, which further reduces the effort of turning the steering wheel.

The principle of this steering system was developed as early as 1816 by the German inventor Georg Lankensberger, but it fell into oblivion until a new steering mechanism was needed when the first motor car was invented. In 1891, Carl Benz, knowing nothing of Georg Lankensberger's invention, re-invented the principle of the knuckle arm axle.

IMPROVED TRACKING STABILITY

Besides the advantages mentioned above, the axle steering principle also improved the vehicle's behaviour when cornering. With the pivoting axle, the two wheels remain parallel to each other when the steering wheel is turned, but this is not ideal. When driving in a curve, the radius described by the wheel on the inside of the curve

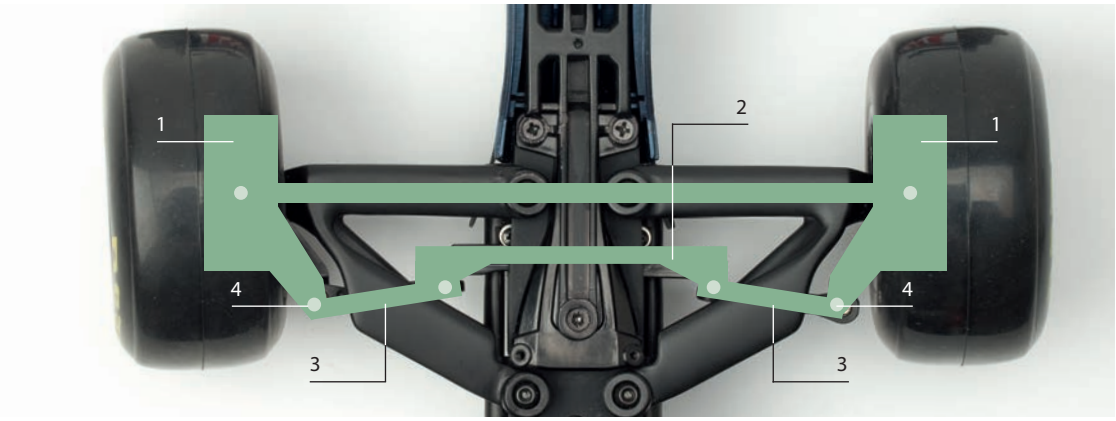

When driving in a straight line, the two knuckle arms (1) at the outer ends of the steering linkages are parallel. When the steering slider (2) moves to the right as shown below, the track rods (3) also move to the right, pushing and pulling the two steering cranks (4) of the knuckle arm.

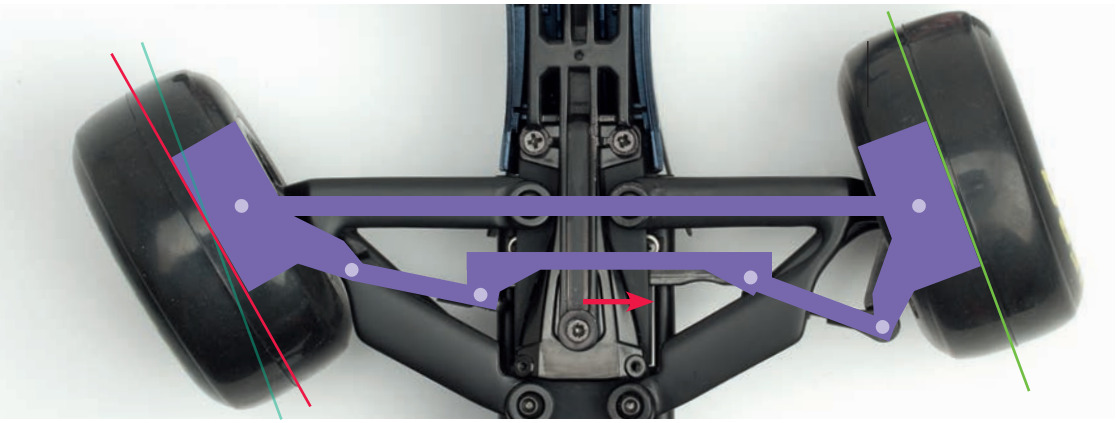

As the knuckle arms change angle, the offset of the steering slider from the centre of the car means that the two knuckle arms do not stay parallel. The wheel on the inside of the curve angles more towards the centre of the curve (indicated by the red line) than the wheel on the outside of the curve (the green line).

to the centre is smaller than the wheel on the outside of the curve. This cannot be the case with pivoting axle steering because the wheels always remain parallel to each other. The wheel which is closer to the centre of the curve has to 'scrub' the road surface. The result is greater tyre wear. Also, the vehicle becomes more difficult to control because the wheel on the inside of the curve is constantly pushing towards the outside of the curve.

Knuckle arms provide a way to solve this problem if the ends of their cranks are angled slightly towards the centre of the vehicle. The geometry can be organised so that when the track rods are moved to the right or the left, the knuckle arms move to different angles, turning the wheel on the inside of the curve further than the one on the outside.

ADJUSTABLE TOE-IN ANGLE

The angle to which the two wheels vary when turning can be set very accurately by adjusting the length and position of the track rods. In modern car manufacture, designers and engineers take advantage of this flexibility to optimise the steering. In a racing car chassis, the steering linkage is made as adjustable as possible so that the car can be set up to suit different tracks and other variable conditions.

The steering layout of your RB7 racer is also adjustable, but is pre-configured so that each wheel drives on a circular path following the ideal radius of the corner. With a little experience, you will soon discover which setting is best for your way of driving – an aggressive steering setting or a 'good-natured' one.

Stage 21

THE FRONT SHOCK MOUNT

HERE'S HOW YOU FIT THE FRONT SHOCK MOUNT ONTO THE FRONT CHASSIS OF YOUR RB7 RACER.

Tools & Materials

Phillips screwdriver (size 2)

1. Front shock mount
2. Countersunk self-tapping screw 3 x 20mm
3. 2 countersunk self-tapping screws 3 x 16mm
4. 2 ball-headed screws 5.8mm

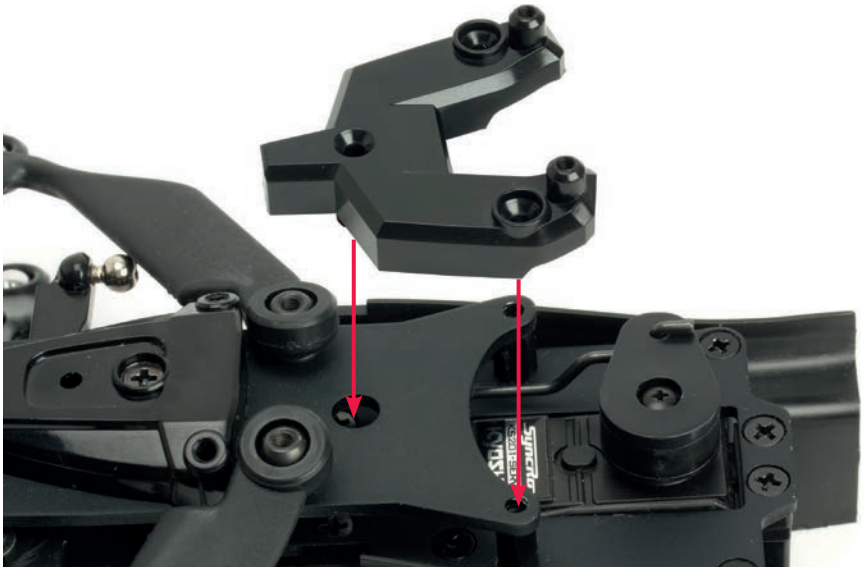

01 In this session, you will attach the front shock mount to the front chassis. It is fitted behind the front pushrod mount. The front shock mount has a projection on its underside that will help you place it in the correct position on the front chassis (see left arrow, above). The two rear arms are fixed in place by screws (see right arrow).

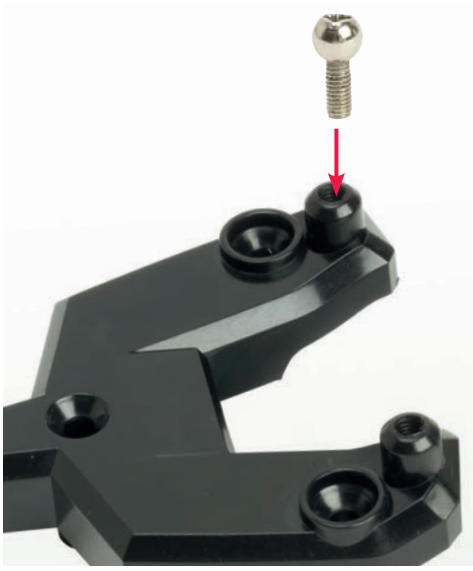

02 Place the front shock mount on a flat surface and insert one of the two 5.8mm ball-headed screws into the hole located in the right arm (see red arrow). Tighten it as much as you can with your fingertips.

03 Tighten the screw fully, using the size 2 Phillips screwdriver.

04 Insert the second 5.8mm ball-headed screw into the hole of the left arm (see red arrow). Tighten it as much as you can with your fingertips.

05 Tighten the screw fully, using the size 2 Phillips screwdriver.

06 Before you continue, check that you have both ball-headed screws positioned accurately in their holes, as shown above. If not, try unscrewing them and then screwing them back into the holes at a slightly different angle.

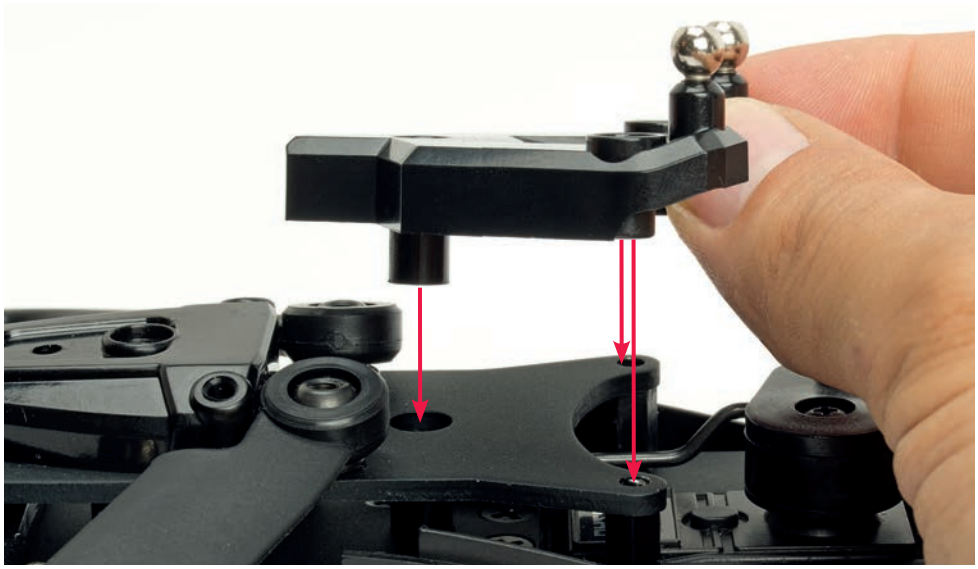

07 Hold the shock mount as shown in the photo above, and place it on the front chassis. The projection on the bottom of the mount fits into the large hole in the centre of the front upper chassis, and the holes in the two arms of the shock mount should fit above those at the ends of the front upper chassis (see red arrows).

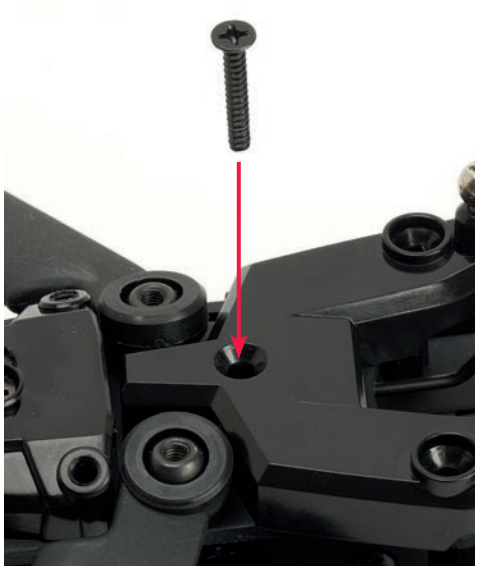

08 Place the 3 x 20mm countersunk screw into the front hole of the shock mount.

09 Take your size 2 Phillips screwdriver and turn the screw fully into the hole.

10 Place one of the two 3 x 16mm screws into the hole on the right arm (see red arrow).

11 Tighten the screw all the way into the hole.

12 Place the second 2 x 16mm countersunk screw into the hole in the left arm (see red arrow).

13 Tighten the screw all the way into the hole.

14 To check if you have tightened both screws completely, look at the assembly from the side.

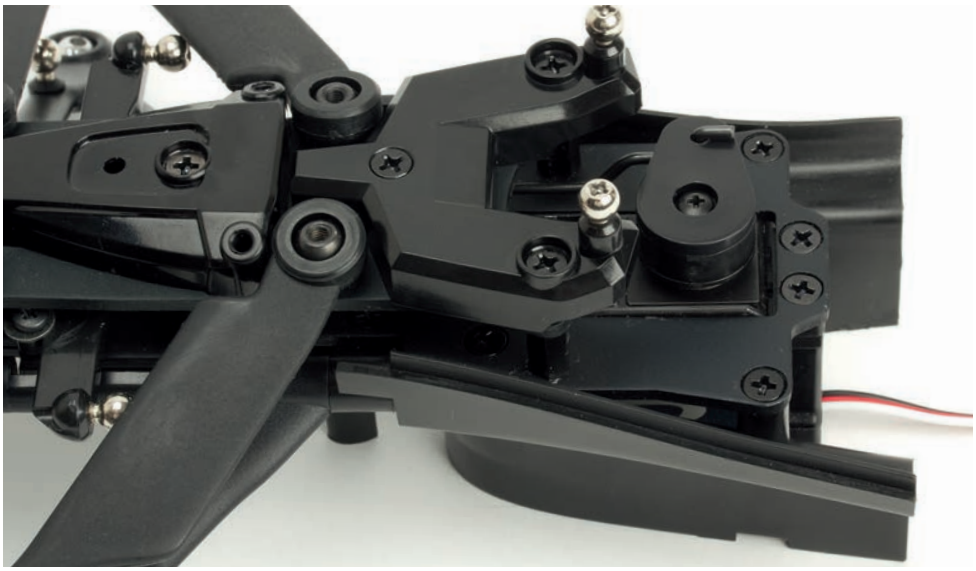

15 If there is a gap between the shock mount and the upper chassis plate (see arrows in Step 14), then you will need to repeat Steps 10-14 to correct the fit. At the end of this session, your front chassis should look like the one shown in the photo above.

Stage 22

THE LEFT FRONT PUSHROD

THIS IS HOW TO FIT THE LEFT FRONT PUSHROD, WHICH IS A KEY PART OF YOUR RB7'S SUSPENSION.

Tools & Materials

Phillips screwdriver (size 2)
Angled needle-nose pliers (smooth)

1. Left front pushrod
2. 3 x 12mm screw
3. Countersunk 3 x 10mm screw
4. Left front push rod crank
5. Pillow ball
6. 5.8mm ball-headed screw
7. Left front pushrod crank collar

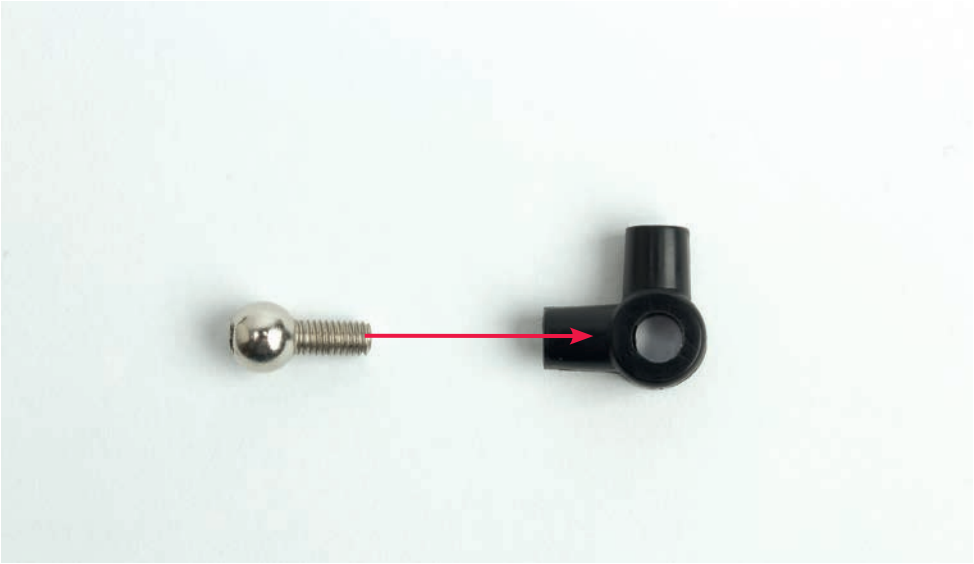

01 Insert the 5.8mm ball-headed screw into the hole on the left side of the crank (red arrow), and screw it into place.

02 This is how the ball-headed screw and crank should appear.

03 Insert the 3 x 10mm countersunk screw into the 5.8mm pillow ball (red arrow).

04 This is how the pillow ball and screw should appear.

05 Take the assembly from Step 04, and screw it by hand, as far as possible, into the upper hole of the crank (see red arrow).

06 Continue to screw the assembly into place with a screwdriver.

07 Place the collar as shown above, then place the crank assembly over it (red arrow).

08 Press the collar into the hole in the crank.

09 Your assembly should now look like the one shown above.

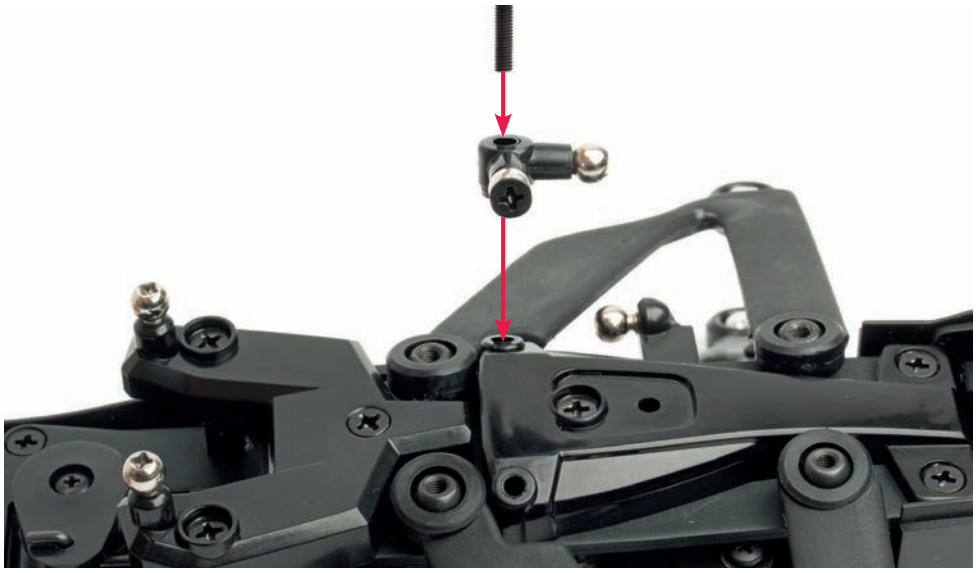

10 Place the 3 x 12mm screw through the hole in the crank assembly and into the hole on the front chassis (red arrows).

11 Turn the screw into the hole until it stops, then loosen it by about half a turn.

12 Position the left front pushrod between the two left wishbones, placing the hole at the outer end over the pillow ball of the lower wishbone (see red arrow).

13 Press the left front pushrod onto the pillow ball of the lower wishbone.

14 Join the other end of the pushrod onto the pillow ball of the crank, fitted in Step 02 (see red arrow). Press the parts together until the ball locks into the hole.

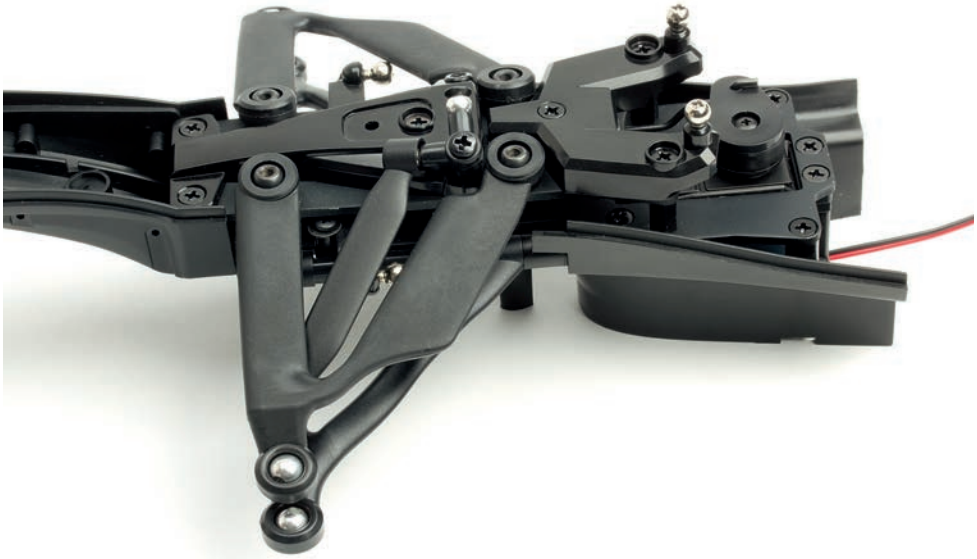

15 This is how the left front pushrod and wishbone assembly should look at this stage.

Stage 23

LEFT FRONT KNUCKLE ARM

IN THIS STAGE, YOU FIT THE LEFT FRONT AXLE INTO THE KNUCKLE ARM, AND THEN ATTACH THIS ASSEMBLY TO THE FRONT LEFT SUSPENSION WISHBONES.

Tools & Materials

Phillips screwdriver (size 2)
Angled needle-nose pliers (smooth)

1. Left front knuckle arm
2. 1.5mm Allen key
3. Left front axle
4. 6mm locknut
5. 5.8mm pillow ball
6. E-ring E2.5
7. 3 x 3mm set screw
8. Kingpin

01 Position the left front knuckle arm as shown, and place the 5.8mm pillow ball into the hole in the projection on the right of the arm (red arrow).

02 Screw the pillow ball all the way into the hole with a size 2 Phillips screwdriver.

03 Hold the left front axle as shown, and insert it into the hole in the centre of the knuckle arm (red arrow).

04 Before pushing the axle fully in, align the hole at its upper end (see Step 03) with the holes of the knuckle arm (see red line).

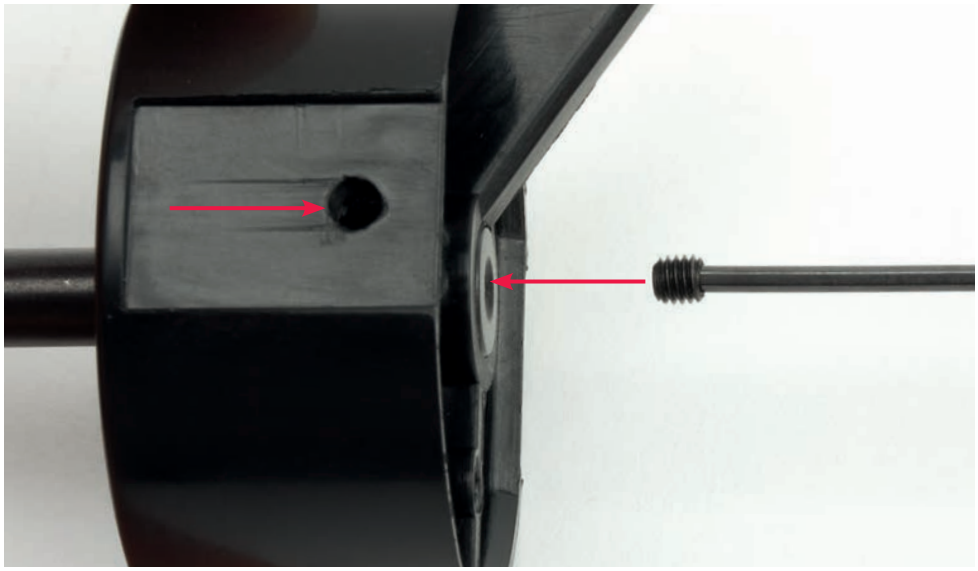

05 Push the axle all the way into the hole of the knuckle arm, until its end is flush with the edge of the knuckle. Then, holding the knuckle arm as shown, look through the hole on the outside (left arrow) to check that the holes are aligned correctly, as in Step 04. If not, turn the axle until they align correctly. Then, using the 1.5mm Allen key, insert the 3 x 3mm set screw into the hole at the end of the axle (right arrow), but don't screw it all the way in.

06 Position the front chassis assembly so that you can see both pillow balls of the left wishbones, as shown, and align the balls vertically.

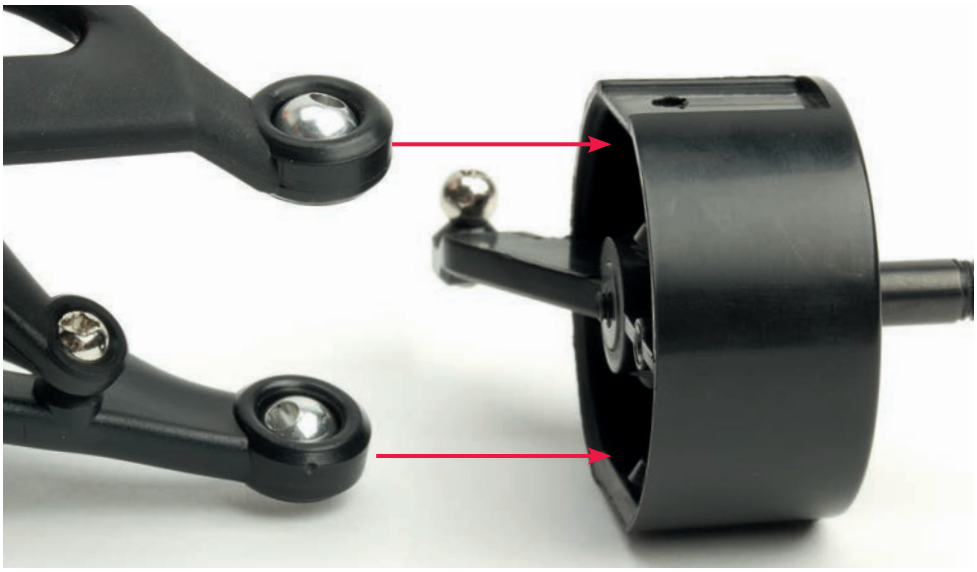

07 Place the knuckle arm as shown in the photo, and position the ends of the wishbones above and below the axle. Make sure that the holes of the pillow balls remain aligned as vertically as possible.

08 Look at the assembly from above through the hole marked with a red circle. If you can see through it, the balls are aligned correctly. If not, remove the wishbones and repeat Steps 06 and 07.

09 Insert the kingpin into the hole at the top of the knuckle arm (red arrow). Push it into the hole until the groove highlighted in Step 10 is visible.

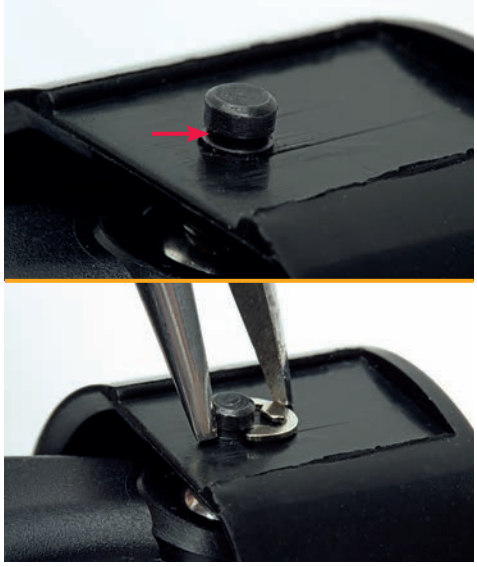

10 Turn over the assembly, and locate the groove at the bottom of the kingpin (red arrow). Use pliers to clip the E-ring into this groove.

11 Take the 1.5mm Allen key and tighten the 3 x 3mm set screw to secure it in place, as shown in Step 12.

12 The photo above shows how far the 3 x 3mm screw should be screwed into the hole.

13 Turn the 6mm locknut, as shown above, onto the threaded end of the axle.

14 At the end of this stage, the left front knuckle arm has been connected to the two wishbones. You are one step closer to completing the left side of the front chassis.

Stage 24

THE LEFT FRONT WHEEL BEARINGS

THE WHEEL BEARINGS ENSURE THAT THE WHEELS OF YOUR MODEL RB7 ARE FREE TO ROTATE WITH A MINIMUM OF FRICTION. HERE'S HOW YOU INSTALL THE BEARINGS OF THE LEFT FRONT WHEEL.

Tools & Materials

Cross wrench

1 Left front wheel bearings x 2

01 To install the two wheel bearings, you will need the left front wheel that you assembled in Stage 7, the bearing insertion tool from Stage 18, and the cross wrench from Stage 4.

02 Take the cross wrench and insert the adapter into the arm labelled '10'.

03 Place one of the wheel bearings onto the end of the adapter. Then push the bearing into the hole in the centre of the wheel (red arrow) and remove the cross wrench and adapter.

04 Now turn the wheel around and repeat Step 03, inserting the second bearing into the other side of the centre of the wheel (red arrow).

05 At the end of this stage of assembly you have completed the front left wheel.