DeAGOSTINI MODEL SPACE™

Red Bull Racing
FORMULA ONE TEAM

RB7

RADIO CONTROLLED • BUILD IT YOURSELF • NITRO ENGINE

Pack 16

Stages 61-64

DeAGOSTINI MODEL SPACE™

Red Bull Racing FORMULA ONE TEAM

RB7

Contents

Photo credits: All photographs copyright © DeAgostini

Visit our website www.model-space.com

DeAGOSTINI MODEL SPACE™

Editorial and design by Continuo Creative, 39-41 North Road, London N7 9DP.
All rights reserved © 2014 De Agostini UK Ltd, Battersea Studios 2, 82 Silverthorne Road, London SW8 3HE
RED BULL RACING RB7 complies with CE regulations.
NOT SUITABLE FOR CHILDREN UNDER THE AGE OF 14. THIS PRODUCT IS NOT A TOY AND IS NOT DESIGNED OR INTENDED FOR USE IN PLAY. ITEMS MAY VARY FROM THOSE SHOWN.

THE GX21 NITRO ENGINE

AS FAR AS POWER FOR ITS SIZE IS CONCERNED, THE ENGINE OF YOUR RC CAR HAS NO NEED TO BE AFRAID OF ANY COMPARISON WITH ITS BIG BROTHERS. THIS HIGHLY DEVELOPED NITRO MOTOR GUARANTEES EXCELLENT ACCELERATION FIGURES.

For its size, the performance of your Kyosho GX21 engine is very impressive. Measuring about 9 x 4.5 x 10cm (length x width x height), weighing about 460g and with a capacity of 3.49cc, this miniature single-cylinder power unit can develop about 1.8bhp. This means that with an overall weight of about 2.40kg, your Red Bull RB7 model develops 0.75bhp per kg. Scaled up to the 640kg original, this would correspond to a racing car developing about 480bhp! This may not quite match the performance of the V8 engines of the real RB7 and the other Formula 1 cars, but it's nevertheless very impressive.

COMPONENTS OF THE GX21

The main components of a full-size car engine and a small engine used for a model racing car are – apart from the differences in size – broadly similar (see illustration right). The centrepiece of the engine is a piston that moves up and down in a cylinder, which is why this type of internal combustion engine is also known as a piston engine. The cylinder consists of a cylinder sleeve, or liner, made to fit the diameter of the piston accurately, and the cylinder head. These two components form the combustion chamber, which the piston seals from below. When the spark plug (or glow plug, in the case of the GX21) at the centre of the cylinder head ignites the mixture of fuel and air provided by the carburettor, the piston is pushed down by a powerful explosion.

The distance covered by the piston from its highest to its lowest position is called the stroke. When this is multiplied by the area of the top of the piston, the result is the cylinder capacity (cc). The cylinder of your GX21 engine has a bore of about 1.66cm and the stroke of the piston is about 1.61cm, giving a cylinder capacity of 3.49cc.

This exploded diagram shows all the main components of the GX21. The cylinder head is contoured to fit the body of the car.

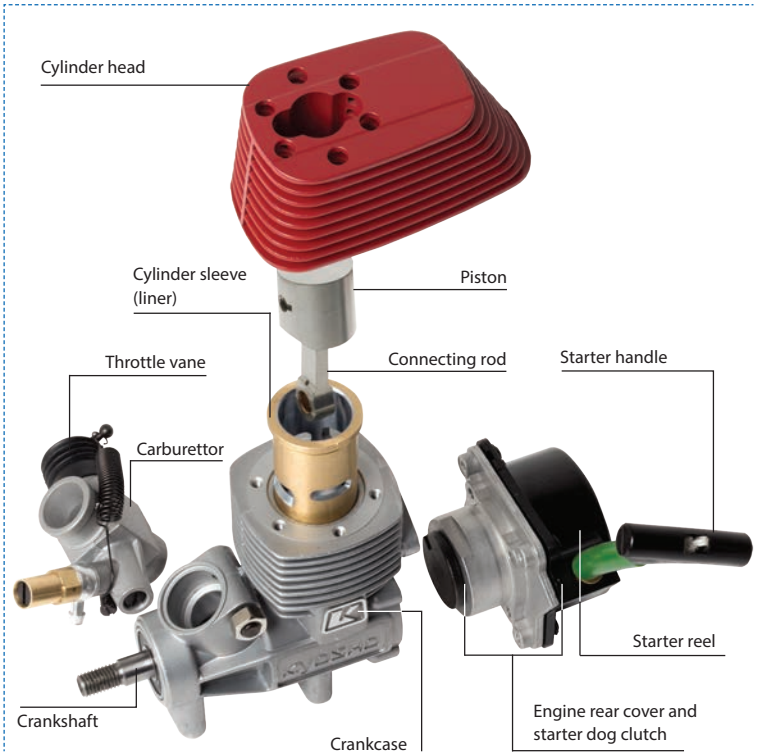

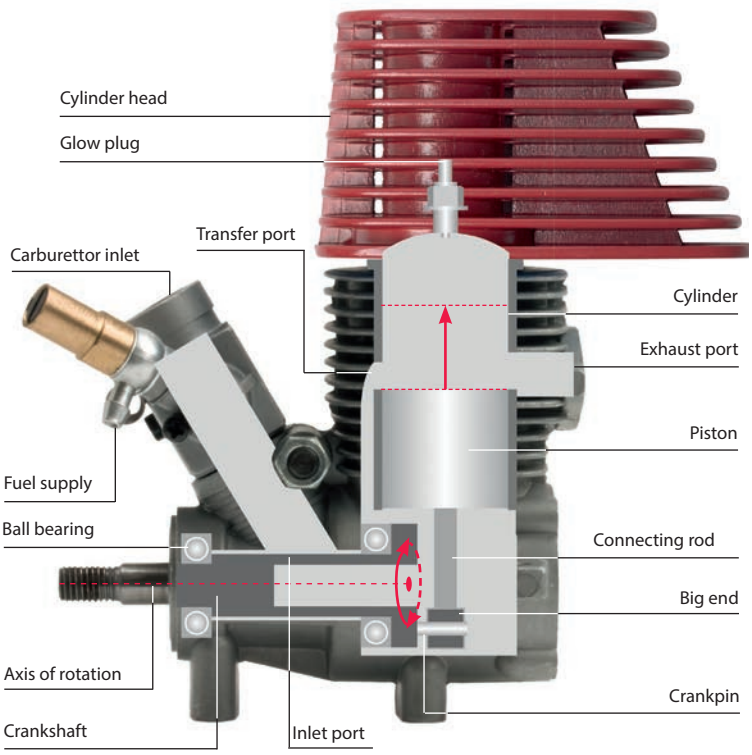

A cutaway view of the GX21. While the crankshaft rotates around its axis (the dotted red line), the crankpin moves in a semi-circle. Because it is connected to the piston by the connecting rod, the diameter of the circle around which the crankpin moves corresponds to the stroke of the piston (red arrow).

FROM UP AND DOWN TO ROTATION

For the GX21 to drive your model RB7, the vertical movement of its piston must be converted into rotational movement that can be passed down the drivetrain. This task starts with the connecting rod, or conrod, which is connected to the piston in such a way that it can swing to and fro like a pendulum. Its foot, known as the big end, is attached to the crankpin of the crankshaft (see the illustration on the right). As the piston goes up and down, the conrod rotates the crankshaft via the crankpin, much like a cyclist's leg pushing down on a bicycle pedal. The crankshaft is firmly supported by ball bearings, and one end extends out of the crankcase so that it can convey the rotary motion to the gearbox and the rest of the transmission.

This basic sequence of movement is the same in all piston engines. In order to keep the piston moving and to ensure continuous rotation of the crankshaft, fresh fuel-air mixture must flow into the combustion chamber and be made to explode at the correct moment. Two-stroke and four-stroke engine types achieve this in different ways.

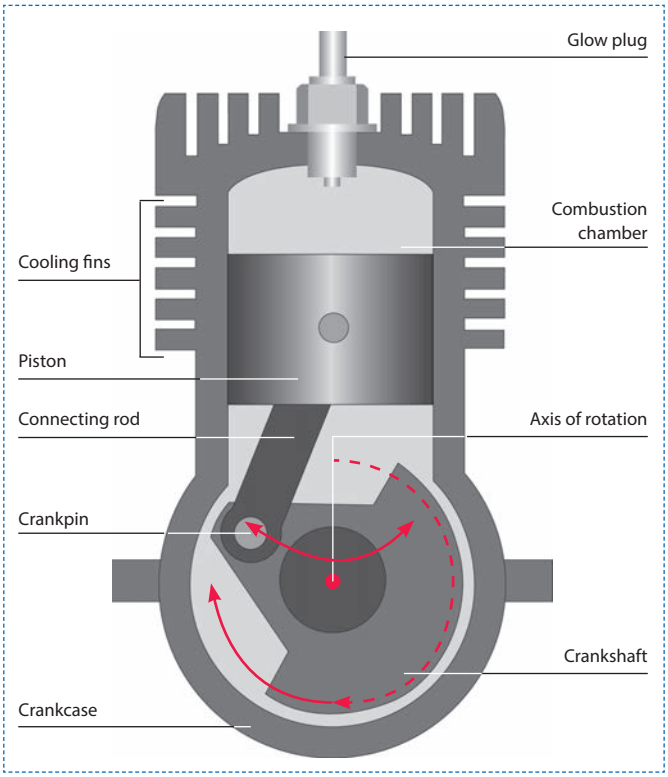

This cross-section of a crankcase (seen here in simplified form) shows the pendulum movement that the connecting rod carries out in order to convert the up-and-down movement of the piston into the circular rotation of the crankshaft.

COMBUSTION PHASES

There are four separate phases in the combustion process (see illustrations below and on page 274):

1. Induction An inlet to the combustion chamber is opened, allowing fresh fuel-air mixture to flow into the cylinder above the descending piston.

2. Compression The cylinder is closed so that the mixture does not escape while the rising piston compresses it.

3. Combustion The mixture is ignited by the glow plug or spark plug. The piston is pushed down very quickly inside the cylinder, which remains sealed. It is in this phase that the engine generates power.

4. Exhaust An outlet from the combustion chamber is opened, allowing the combustion gases to flow out.

This cycle is repeated again and again. There are two ways to control the correct opening and closing of the inlets and outlets. Each up or down movement of the piston is called a stroke, and in a two-stroke engine, one up-and-down movement of the piston is enough to complete a combustion cycle; in a four-stroke engine the piston must go up and down twice.

THE TWO-STROKE ENGINE

Your GX21 engine is a conventional two-stroke design with two characteristic features. The first is that the fuel-air mixture passes through the hollow crankshaft into the crankcase, then passes into the cylinder through transfer ports. The second is that the ports in the cylinder are opened and closed by the piston.

At the start of induction (see illustration below left), the piston is at its lowest point and opens the transfer port, admitting fresh fuel-air mixture into the cylinder.

First stroke of a two-stroke engine. The piston opens the transfer port (Phase 1) to admit fuel-air mixture, and then seals the cylinder to compress it (Phase 2) while fresh mixture is sucked into the crankcase via the inlet port, which now opens.

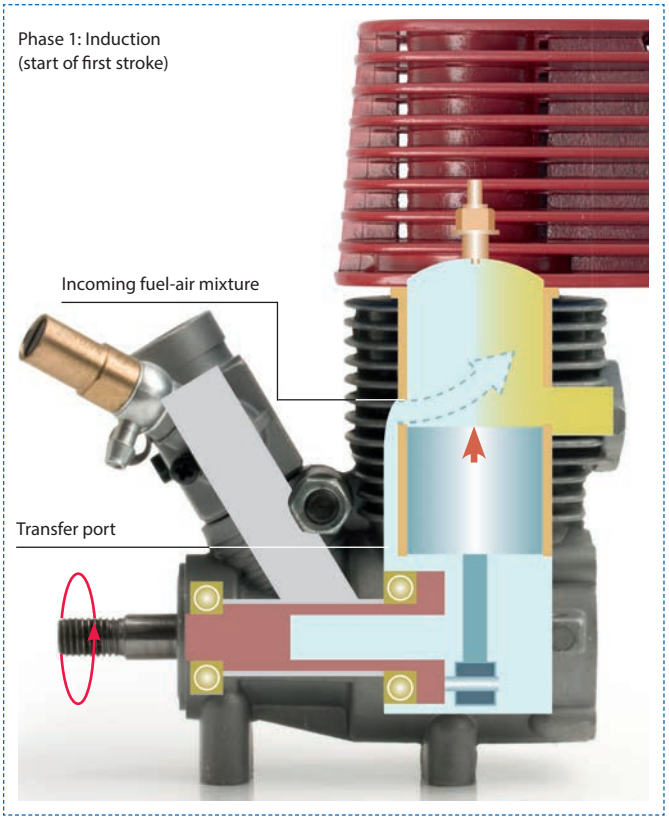

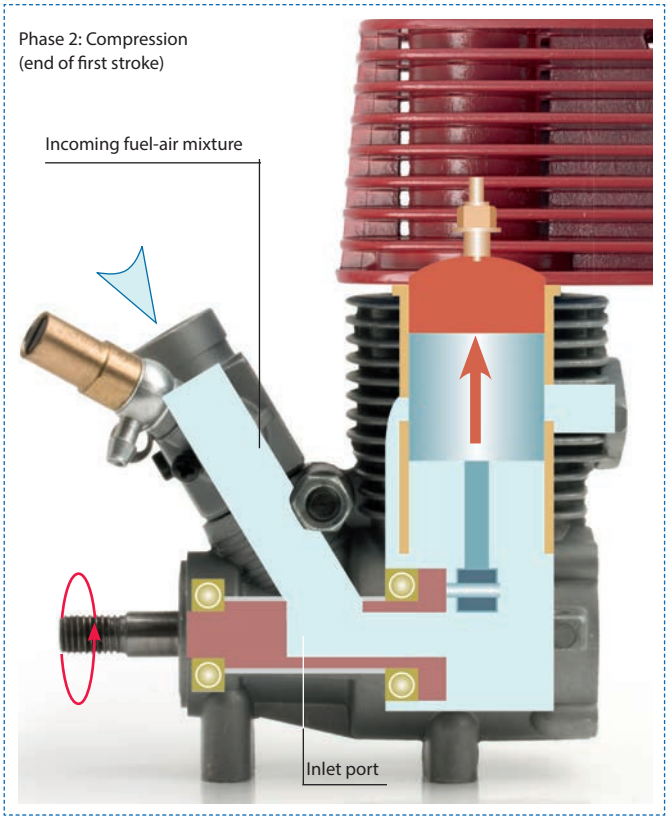

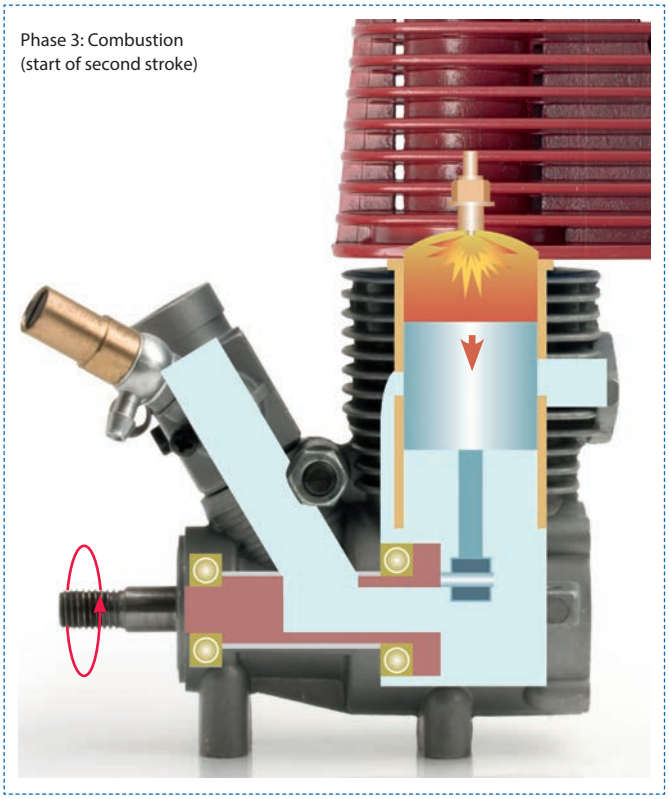

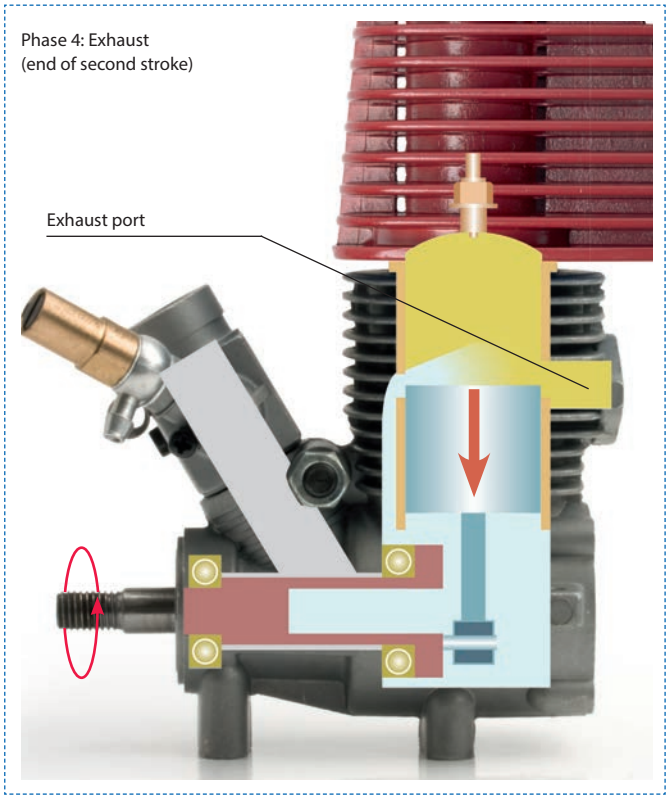

Second stroke. The fuel-air mixture is ignited by the glow plug (Phase 3). The inlet port closes and the descending piston pushes the mixture in the crankcase into the cylinder, while burnt gas escapes out of the exhaust port that has opened (Phase 4).

When the piston goes up, it seals the combustion chamber and the mixture is compressed. At the same time, suction is created below the piston. As the inlet port in the hollow crankshaft is now open, fresh mixture is sucked into the crankcase.

Meanwhile, the pressure in the combustion chamber has increased to such a degree that the mixture can be ignited by the glow plug (Phase 3). The ports in the cylinder are closed, so the explosion pushes the piston down. When it approaches the bottom, it opens up the exhaust, which is higher in the cylinder than the inlet. In this way, most of the exhaust gases escape before the fresh mixture flows through the inlet (Phase 4). Then the cycle starts again.

FOUR-STROKE ENGINES

As each rotation of the crankshaft is accompanied by combustion, two-stroke engines produce lots of power. Their disadvantage is that some of the fresh fuel-air mixture is able to escape through the exhaust, resulting in higher fuel consumption and greater pollution.

Four-stroke engines work differently, as the mixture flow is controlled by valves. The cycle starts with a downward movement of the piston, during which the inlet valve opens and the fuel-air mixture is sucked in. The next upward movement compresses the mixture. Both valves are closed during this process, and they remain so during the ensuing ignition stroke. During the fourth stroke, the outlet valve opens so that the exhaust gases can escape, completing the cycle. A four-stroke engine is cleaner, but less efficient because the piston is driven only on every other crankshaft rotation.

Stage 61

BRAKE AND GEARBOX COVER

IN THIS STAGE, YOU WILL CONTINUE WITH THE ASSEMBLY OF YOUR RB7 RACER'S BRAKE SYSTEM AND THEN FIT THE GEARBOX COVER, OR CENTRE UPPER PLATE.

Tools & Materials

Phillips screwdriver (size 2)
Allen key (1.5mm)

1. Gearbox cover (centre upper plate)
2. Brake cam
3. Brake rod
4. 3 countersunk self-tapping screws 3 x 12mm
5. Collar
6. 3 countersunk self-tapping screws 3 x 10mm
7. 2 countersunk self-tapping screws 3 x 8mm
8. Set screw 3 x 3mm

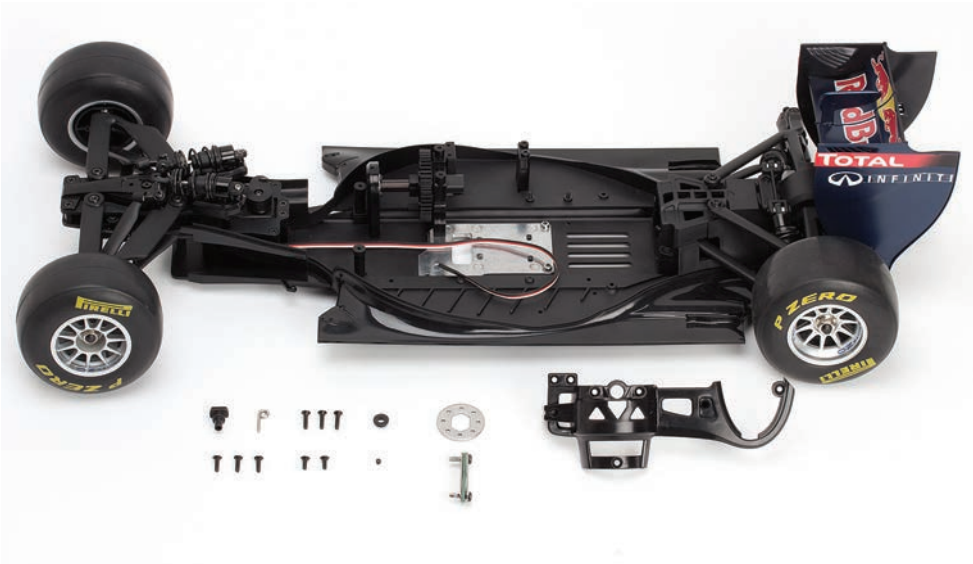

01 For this assembly stage, you will need the parts supplied with this stage, plus the brake rotor (from Stage 58), the brake pad and caliper assembly (from Stage 60) and your chassis assembly.

02 From the side, you will see that the gearbox cover has straight and rounded sections. The rounded section covers the transmission, and the straight section will eventually house part of the RC box.

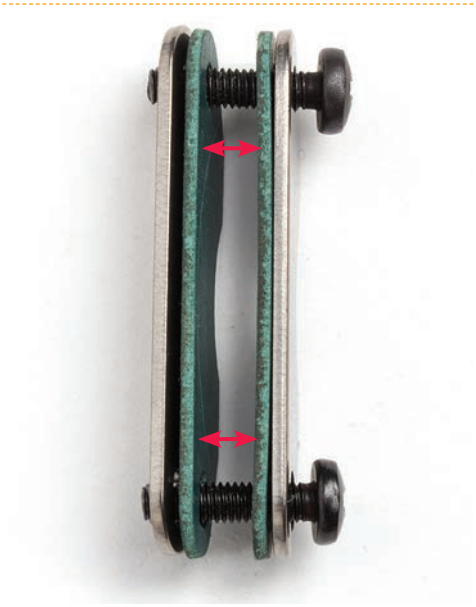

03 Take the brake pad and caliper assembly and remove the adhesive tape from the screw threads. Space the two brake pads slightly apart, as shown in the photo.

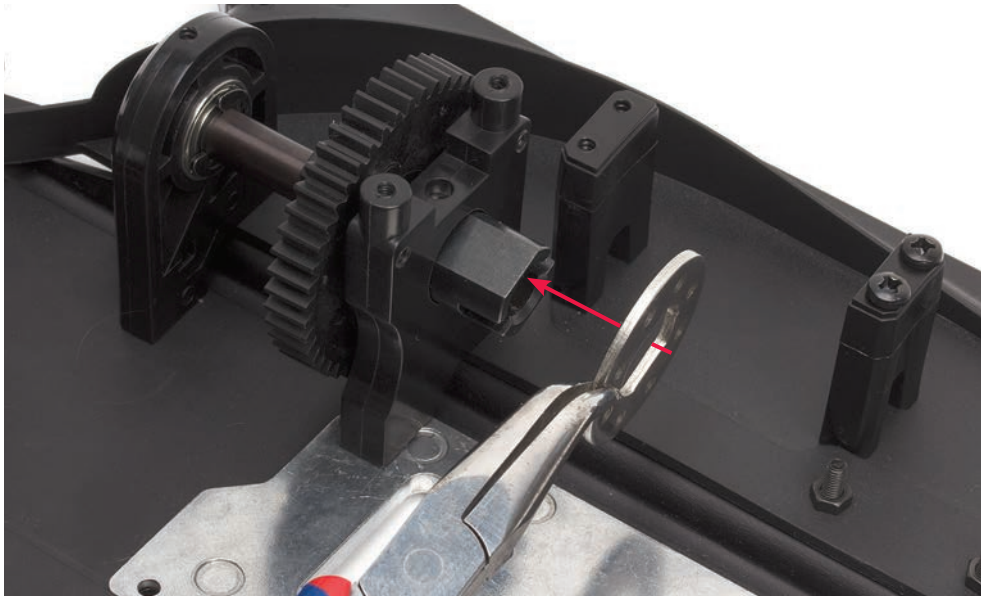

04 Align the hole in the centre of the brake rotor with the end of the cup joint, and slide the rotor onto the joint.

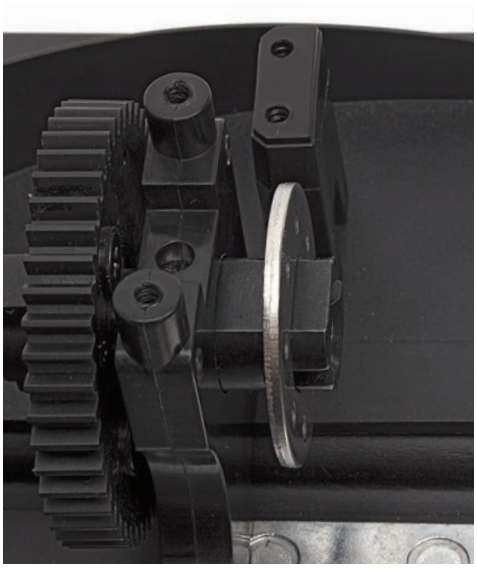

05 Position the brake rotor about a third of the way along the cup joint, as shown above.

06 Hold the brake pad and caliper assembly above the rotor with the pads spread, as shown. Then lower the assembly over the rotor until it rests on the cup joint and the two screws align with the holes in the housing.

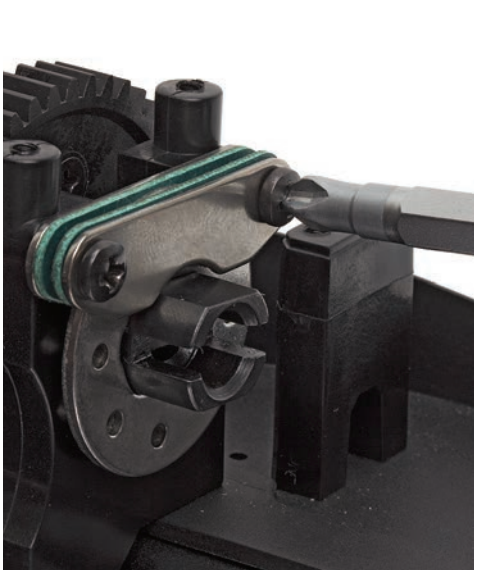

07 Tighten the two screws into the holes in the housing with a Phillips screwdriver. Tighten them just enough to prevent the gear and shaft from turning.

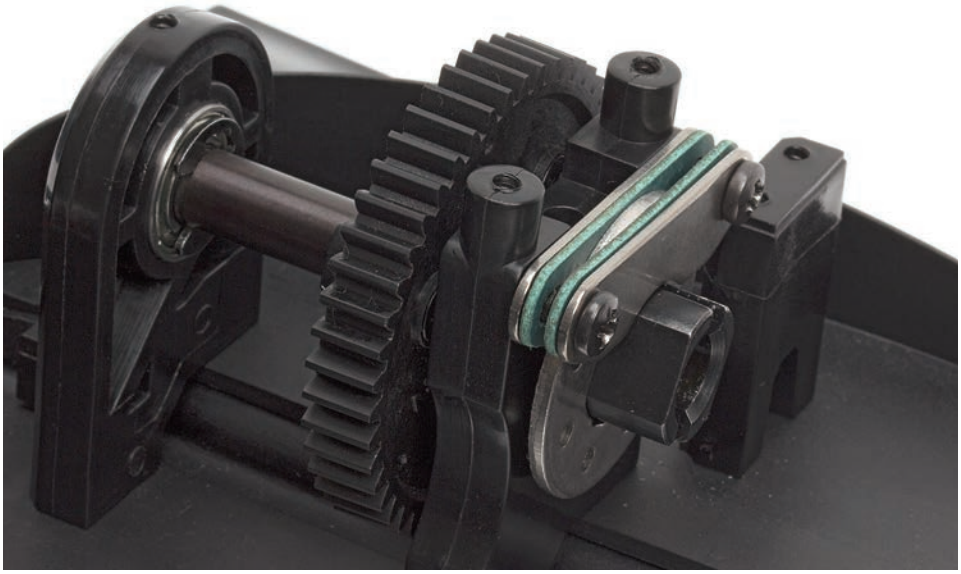

08 Now loosen both screws by one half turn until the gear and shaft can move again without significant resistance. The brake rotor will be in light contact with the pads but won't be stopped by them.

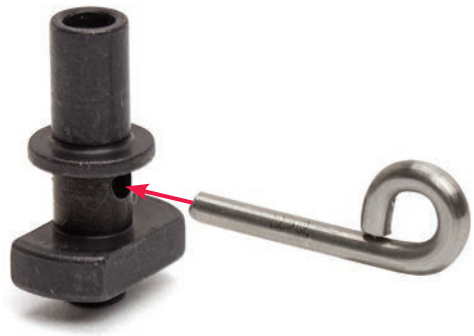

09 Insert the brake rod into the hole below the central flange of the brake cam, as shown. Make sure the loop is pointing upwards.

10 Insert the 3 x 3mm set screw into the hole in the top of the cam, as indicated by the red arrow.

11 Tighten the screw with a 1.5mm Allen key until the rod is locked in place.

12 Place the collar, wide end first, over the top of the brake cam.

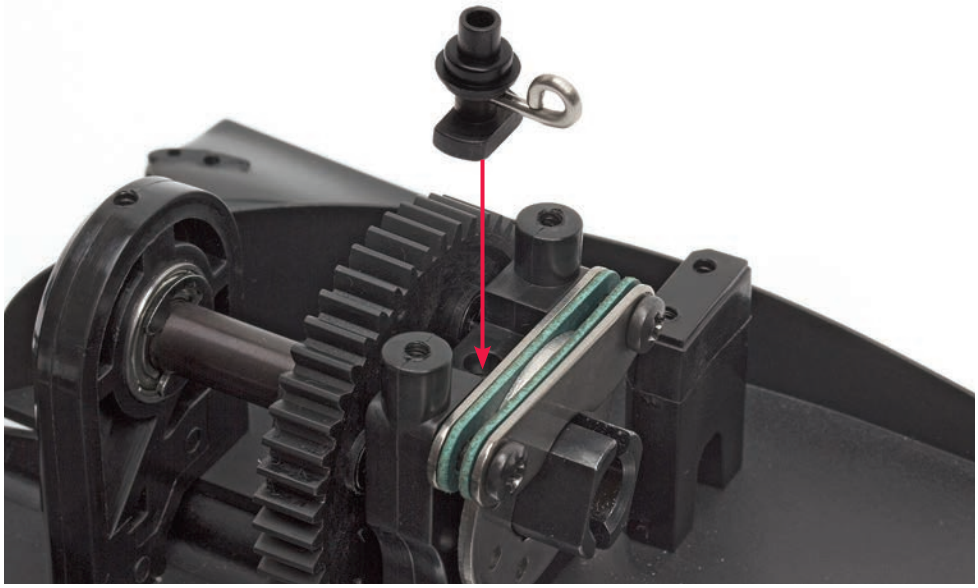

13 Place the brake cam assembly into the recess between the two screw holes on top of the rear centre differential housing.

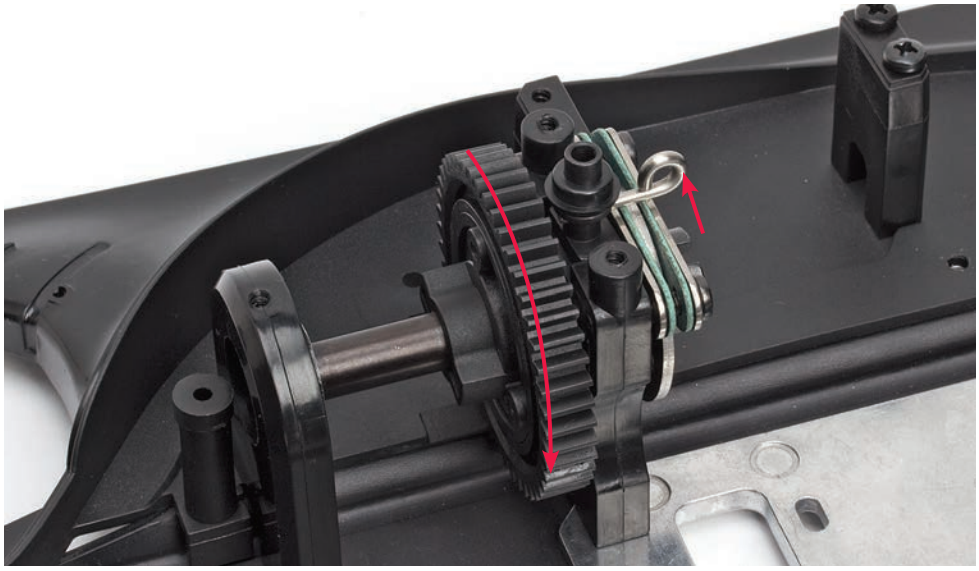

14 The brake system of your RB7 model is not yet complete, but you will now be able to see how it works. The brake rotor turns with the gear and shaft (long arrow). When the brake system is operated, the brake rod (short arrow) turns the cam, which pushes against the brake caliper. The caliper presses the pads against the rotor, slowing or stopping its rotation and with it that of the gear and shaft.

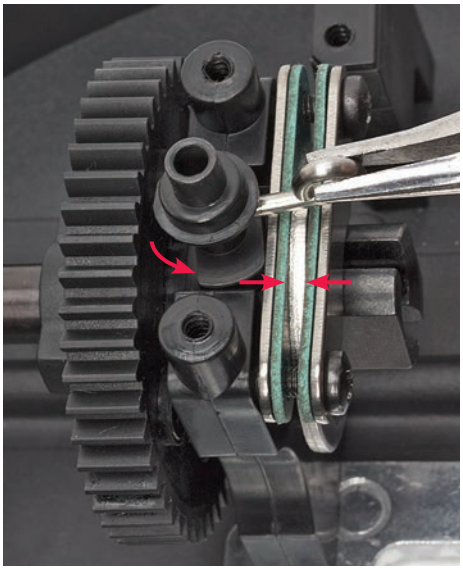

15 This view shows the braking process in more detail. When the cam is turned, its contoured base presses against the brake caliper, which in turn presses the brake pads against the rotor.

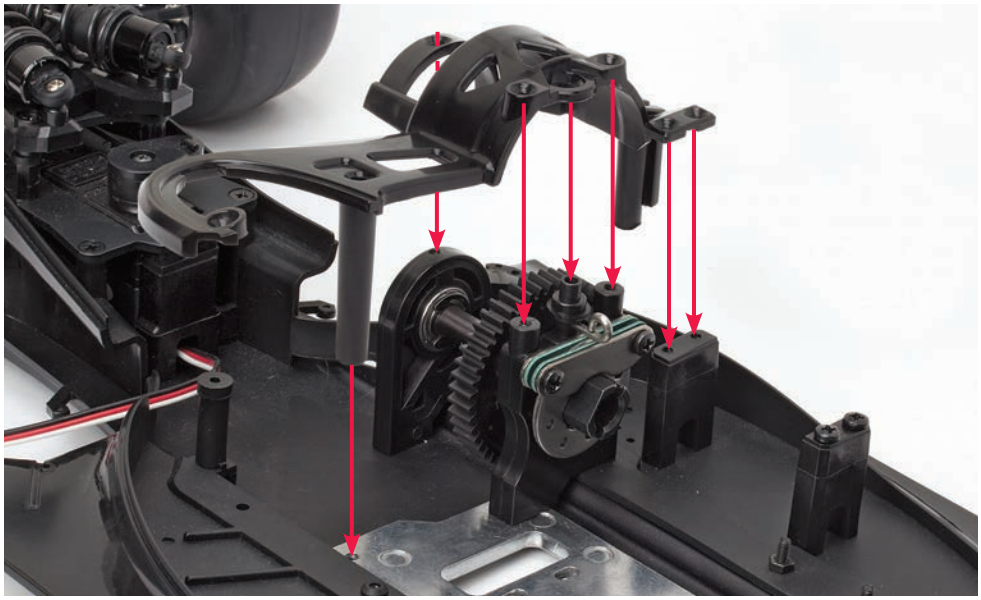

16 Place the gearbox cover onto the chassis, aligning the holes in the cover with the screw holes in the chassis, the front and rear differential housings, the brake cam and the front throttle servo mount (all indicated by the red arrows).

17 As you lower the cover into place, check that the top of the brake cam is positioned in the middle hole of the three on the right in this picture.

18 Take two of the 3 x 10mm countersunk screws (part 6) and insert them into the holes on either side of the brake cam (see red arrows).

19 Using a Phillips screwdriver, tighten the screws into place until their heads are flush with the top of the cover.

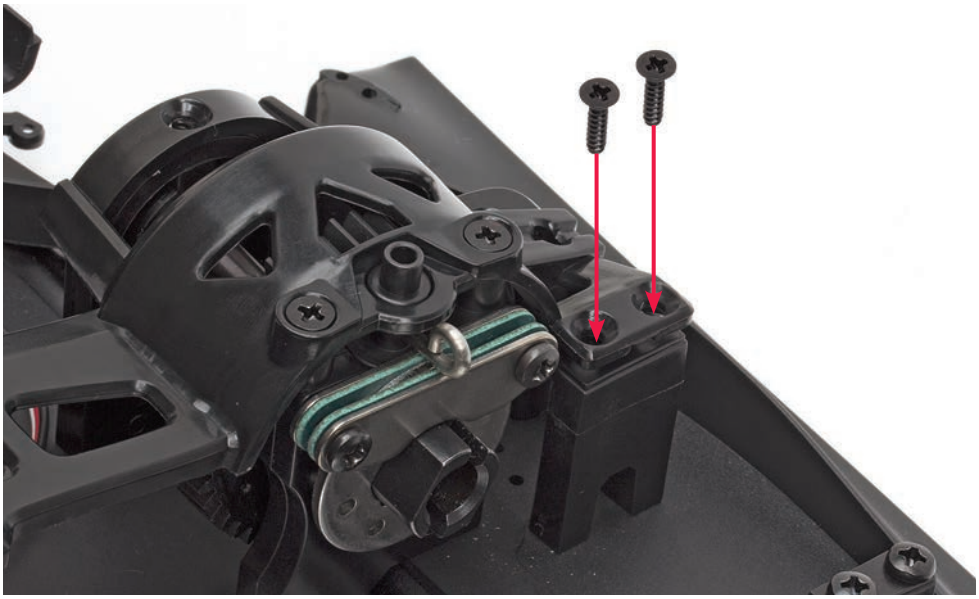

20 Two of the 3 x 12mm countersunk screws (part 4) will be inserted into the holes in the cover above the front throttle servo mount (see red arrows).

21 Turn one of the two screws by a few turns into the outer hole of the cover and the servo mount below, just enough to hold it safely in place.

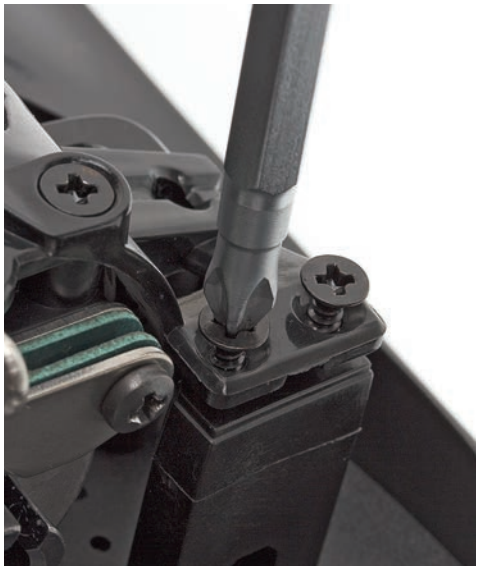

22 Insert the second screw and tighten it by approximately the same amount as the first.

23 Place the third 3 x 10mm countersunk screw (part 6) in the hole at the front of the cover, above the front differential housing.

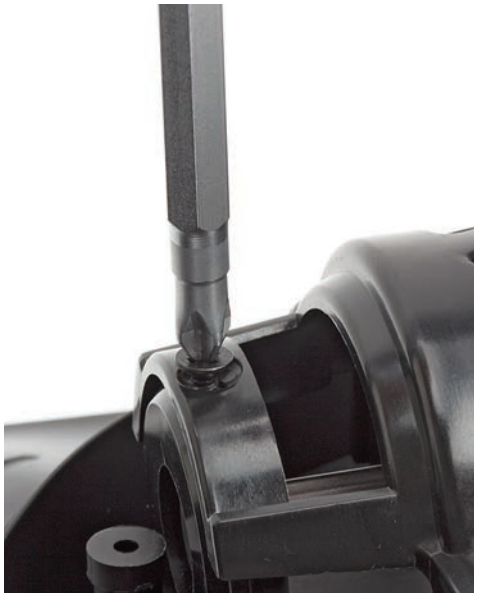

24 Turn the screw fully into the hole. The head should be flush with the top of the cover.

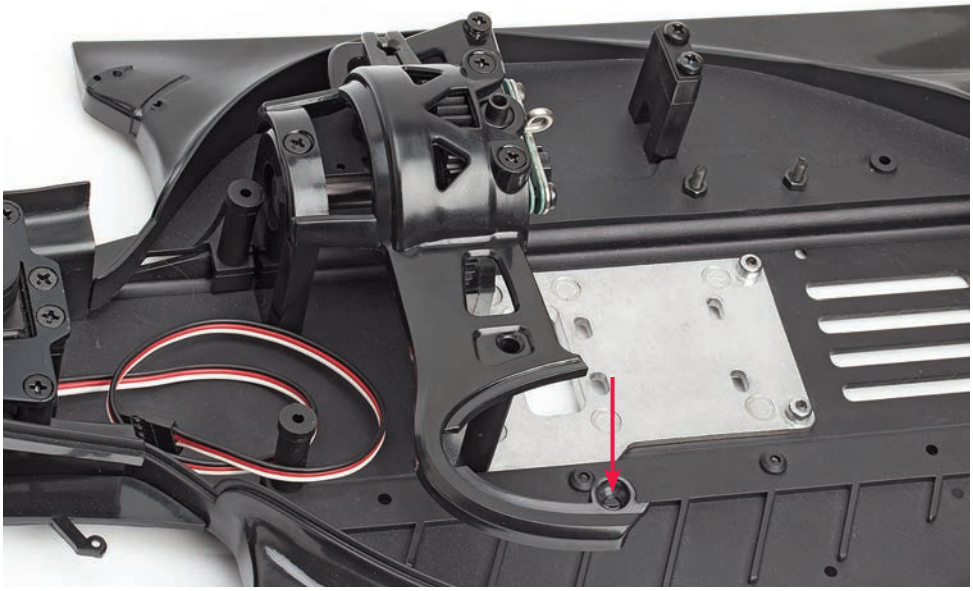

25 The cover is now secured to the chassis. The hole on the left of the cover (see red arrow) will be left free until you receive the lower part of the RC box, in Stage 83.

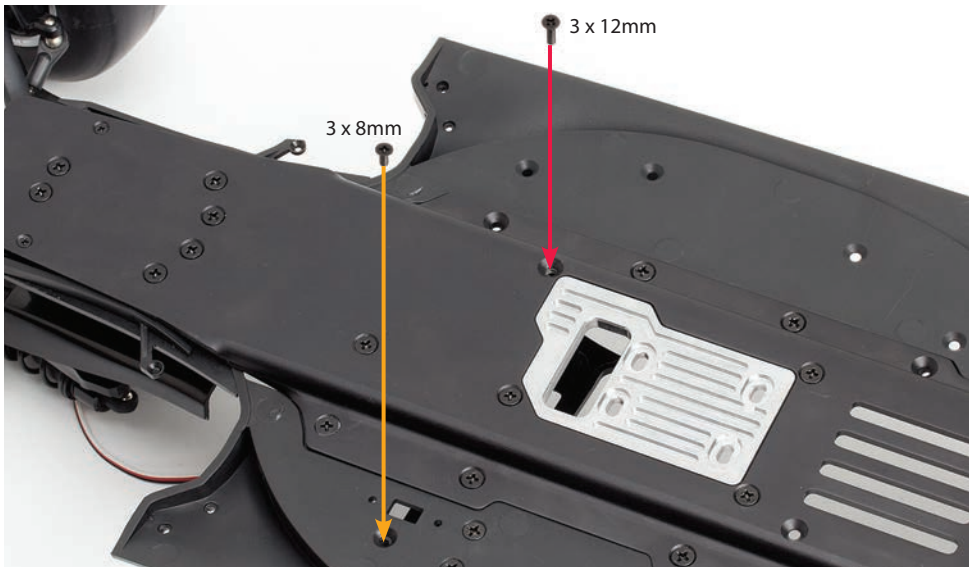

26 Turn the chassis over. Take the remaining 3 x 12mm countersunk screw (part 4) and insert it into the hole just in front of the engine mount (red arrow). Then take a 3 x 8mm countersunk screw (part 7) and place it into the hole next to the rectangular cutout near the edge of the chassis (yellow arrow).

27 Tighten the 3 x 12mm screw into the hole in front of the engine mount.

28 Tighten the 3 x 8mm countersunk screw fully into the hole near the edge of the chassis.

29 At the end of this session, your model should look like this, with the gearbox cover fixed in position. Store the unused 3 x 8mm screw carefully, because you will need it in a later assembly session.

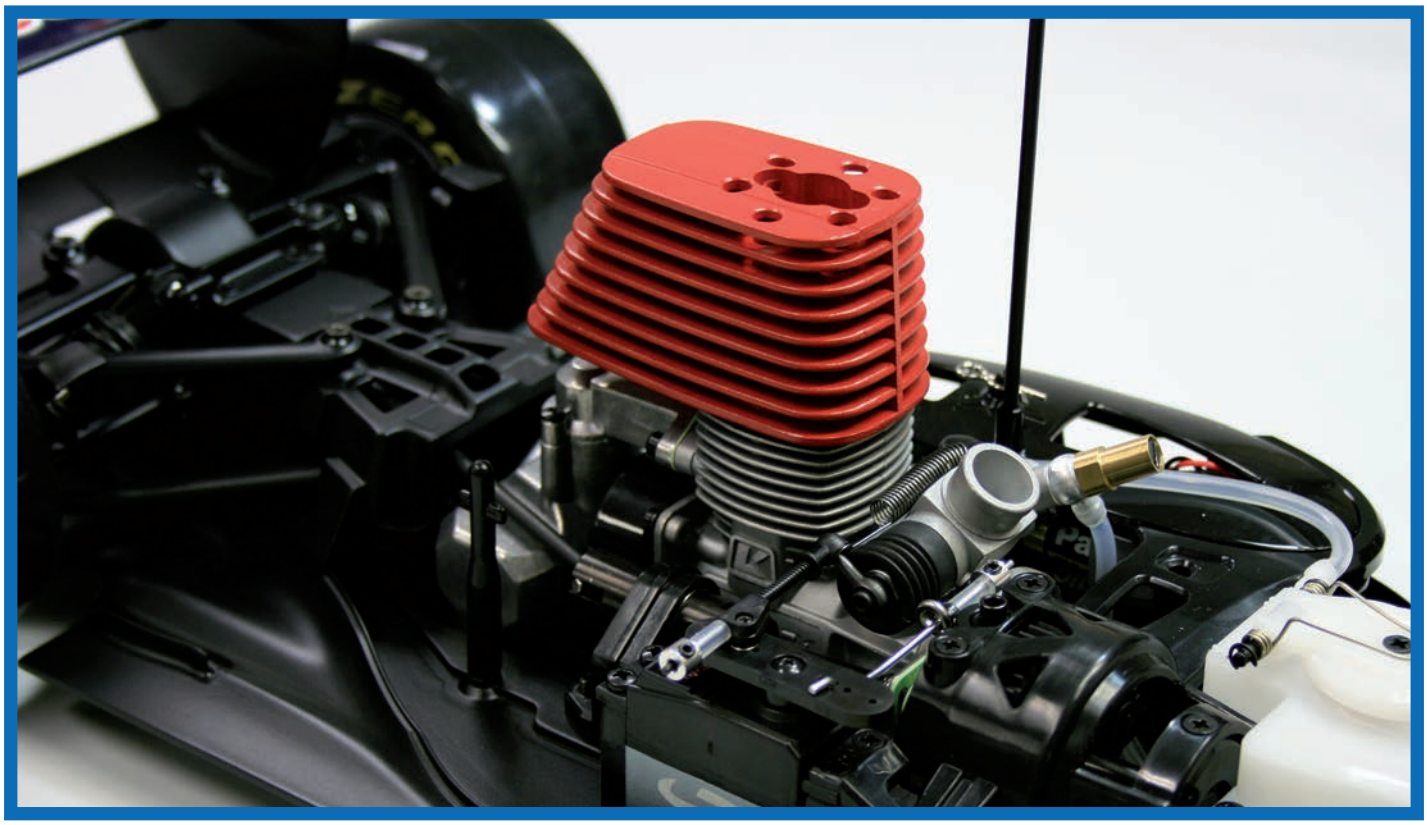


TOTAL
INFINITI
RENAULT
Red Bull
PIRELLI
P ZERO
RAUCH

Stage 62

DRIVESHAFT MOUNT

IN THIS SESSION, YOU WILL ASSEMBLE THE CENTRAL SECTION OF YOUR RB7 RACER'S DRIVETRAIN, SO THAT IT IS READY TO BE FITTED TO THE CHASSIS IN THE NEXT STAGE.

Tools & Materials

2.5mm Allen key (from Stage 41)
Thread-locking compound

1. Driveshaft mount
2. Ball bearings 8 x 14 x 4mm (2 pieces)
3. Front drive cup joint
4. Set screw 5 x 4mm
5. Countersunk screw 3 x 10mm
6. Rear drive cup joint
7. Nut 3mm

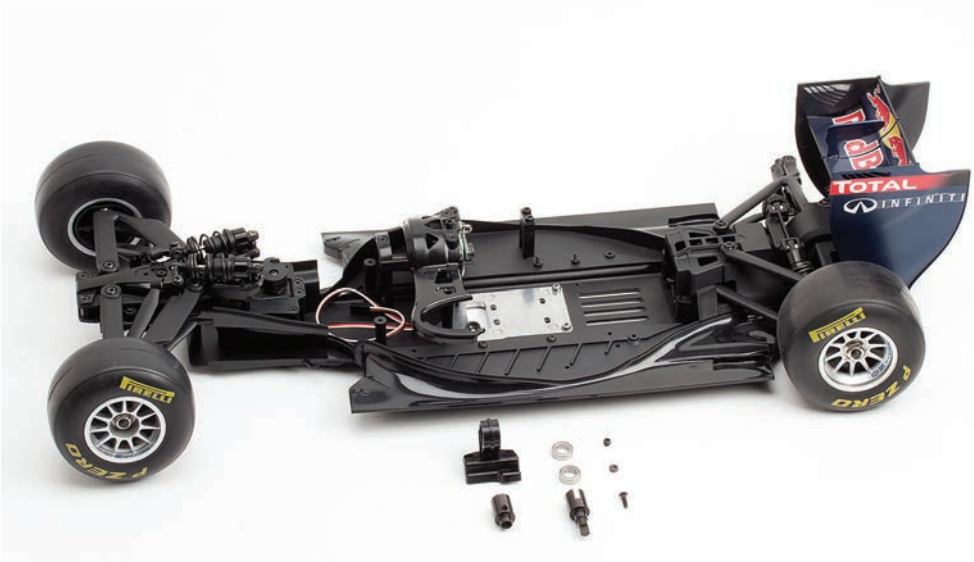

01 In this stage, you will assemble the driveshaft mount and its associated cup joints, so that it is ready to be fitted to your model in the next stage. All you will need in addition to the parts supplied with this stage are a 2.5mm Allen key and some thread-locking compound.

02 The large hole in the angled section of the driveshaft mount will house the two ball bearings.

03 Position the mount with the angled section pointing towards you, and insert a ball bearing into one side of the hole.

04 Press the bearing fully into the hole, making sure that it goes in straight and ends up flush with the mount.

05 Turn the driveshaft mount around and insert the second bearing into the other side of the hole.

06 As before, press the bearing fully into the hole, making sure that it goes in straight and ends up flush with the mount.

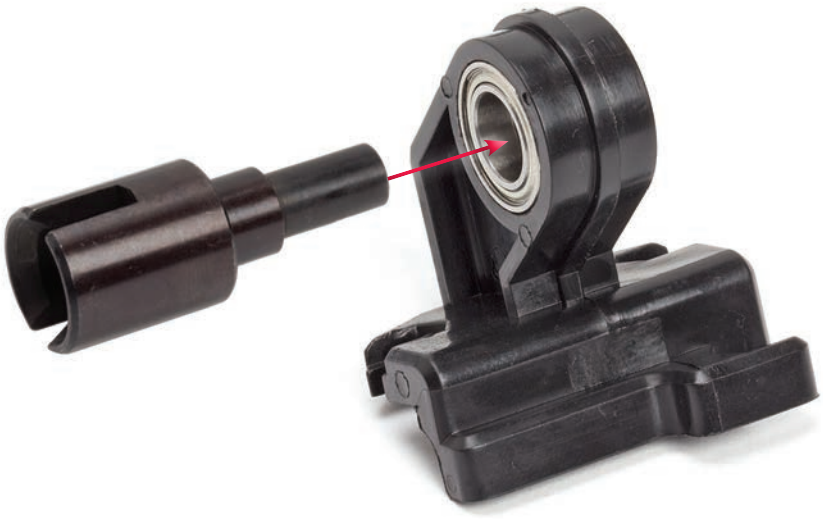

07 Now take the front drive cup joint and insert the end of it into the first bearing, the one you fitted in Step 03, as shown.

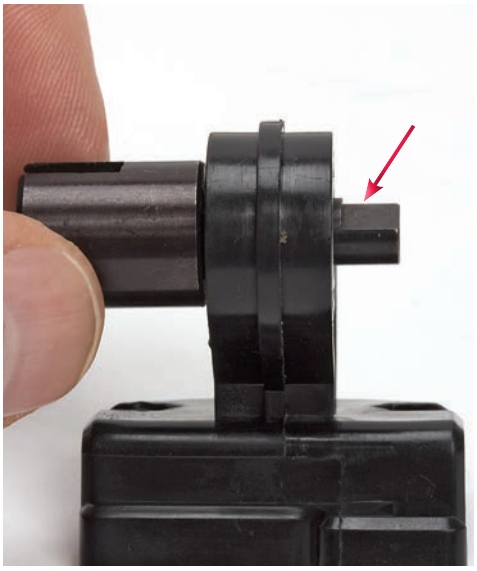

08 Push the cup joint into the bearing until the end is visible on the other side of the mount. Turn the joint so that the flat surface at the end of its shaft (arrowed) is facing upwards.

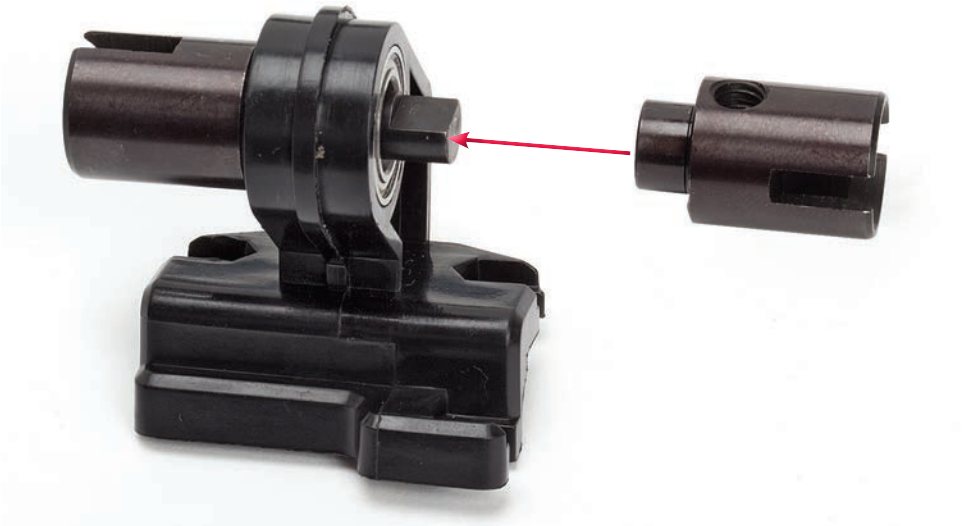

09 Take the rear drive cup joint, and hold it so that the flat in the hole at the smaller end is uppermost, matching the flat on the end of the front drive cup joint. Push the rear drive cup joint onto the end of the front cup joint (arrowed) and into the bearing, until it rests flush against the mount.

10 Now check that the two cup joints are correctly aligned. The flat surface at the end of the front joint must be visible beneath the hole in the rear cup joint.

11 Apply a drop of thread-locking compound to the threaded hole in the rear cup joint. Try not to move the cup joints during the next few steps.

12 Take the set screw and insert it into the threaded hole in the rear cup joint.

13 Tighten the set screw with a 2.5mm Allen key until it stops.

14 The driveshaft mount is now complete. Test that the cup joints can still rotate – if they can't, check the positions of the two ball bearings and adjust them if necessary. Carefully store the 3 x 10mm screw and 3mm nut supplied with this stage for later use.

Stage 63

THE FRONT AND REAR DRIVESHAFTS

IN THIS SESSION, YOU CONNECT THE TWO DRIVESHAFTS TO THE DRIVESHAFT MOUNT ASSEMBLY FROM THE PREVIOUS STAGE AND TO THE FRONT AND REAR DIFFERENTIALS.

Tools & Materials

Angled needle-nose pliers
Phillips screwdriver (size 2)
Toothpicks

1. Bearing grease
2. Front driveshaft
3. Rear driveshaft

01 For this session, you will need your chassis, the driveshaft mount you assembled in Stage 62, the 3 x 10mm countersunk screw and 3mm nut from that stage, plus the front and rear driveshafts and the bearing grease supplied with this stage.

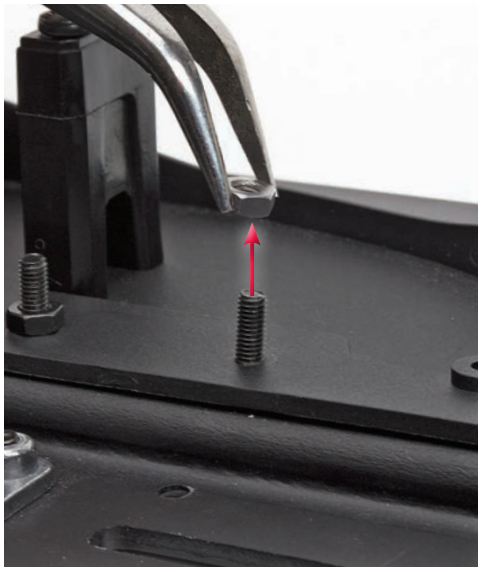

02 First, remove the nuts from the two 3 x 12mm screws that you fitted into the right-hand side of the chassis in Stage 31.

03 Turn the model over and remove the two screws from the chassis and put them safely to one side.

04 Using a toothpick or similar, apply a little bearing grease to the ends of the front driveshaft.

05 Insert one end of the front driveshaft into the cup joint on the end of the main shaft, as indicated by the red arrow.

06 Holding the driveshaft in this position, take the driveshaft mount and fit its front cup joint over the other end of the driveshaft.

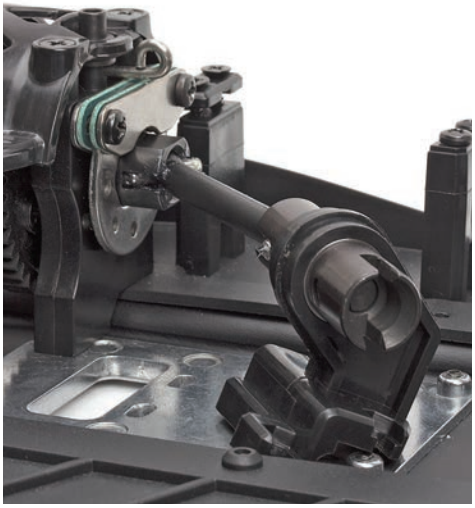

07 The assembly should now look like this. Make sure that both ends of the front driveshaft remain in the cup joints during the following steps.

08 Apply some grease to both ends of the rear driveshaft.

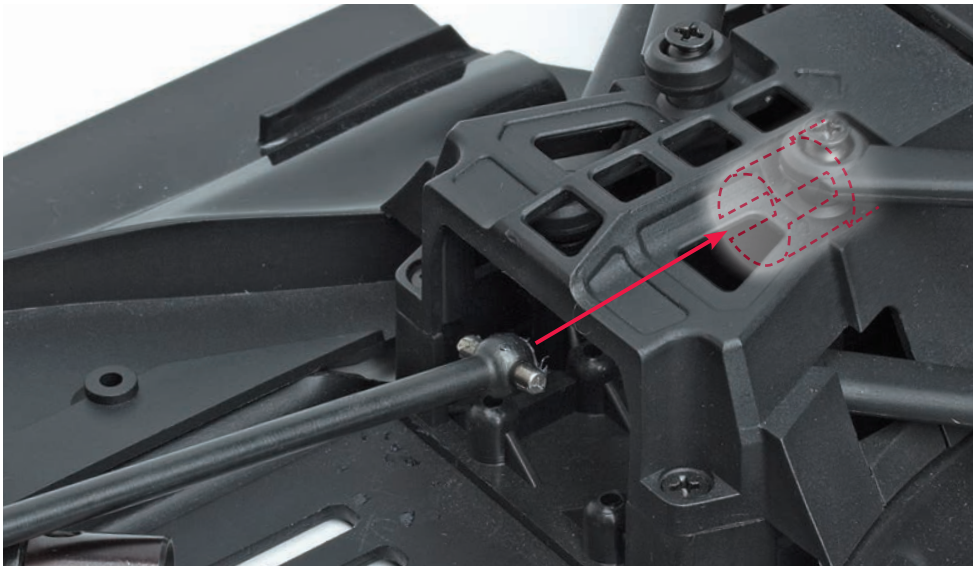

09 Insert one end of the rear driveshaft into the cup joint in the differential assembly at the rear. The joint is near the top of the housing, so it's not visible in the photograph, but its position is indicated by the dotted red outline.

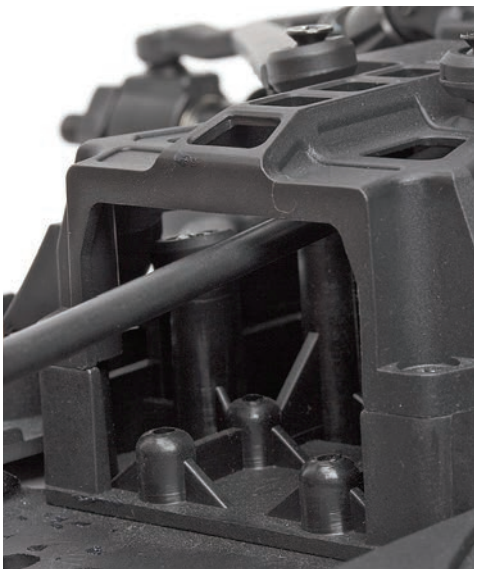

10 This is how the rear driveshaft will look when it is in position in the cup joint of the differential.

11 Holding the rear driveshaft in this position, insert the free end into the rear cup joint of the driveshaft mount by moving the mount closer to the shaft. Be careful when doing this, and don't let the front driveshaft drop out of place when you move the mount.

12 Your driveshaft mount assembly and the shafts should now look like this.

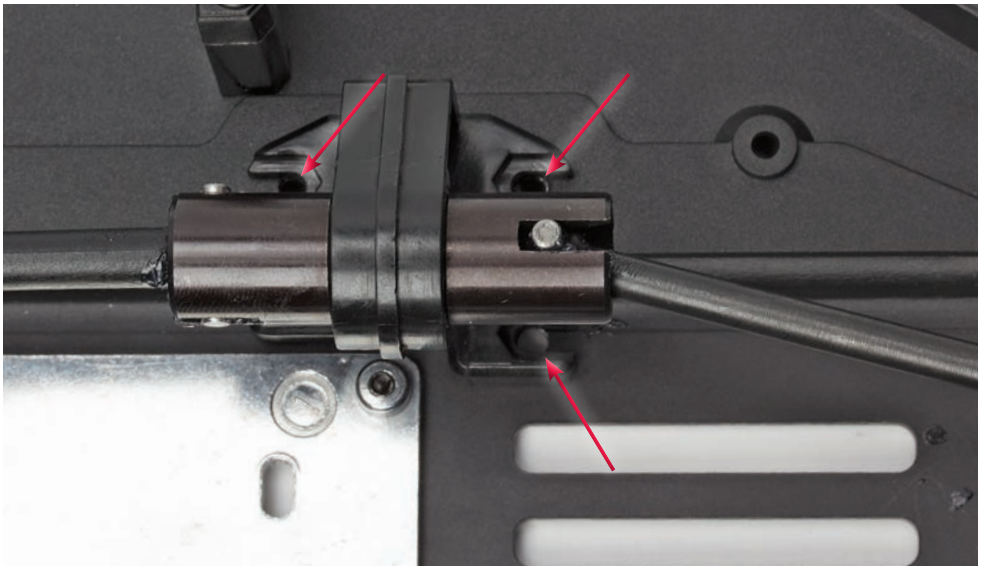

13 Slide the driveshaft mount along the floor of the chassis, holding the driveshafts in position. Stop when the three location points on the mount align with the corresponding screw holes in the chassis, as indicated by the red arrows.

14 Hold the assembly in this position, and turn the chassis over. Then insert one of the 3 x 12mm screws removed in Step 03 into the hole indicated by the red arrow.

15 Push the screw in until its end is about level with the surface of the recess in the base of the driveshaft mount.

16 Take one of the two nuts removed in Step 02, and place it into the recess in the base of the mount.

17 Holding the nut in place, tighten the screw by a few turns until it is held by the nut.

18 Now insert the second 3 x 12mm screw into the hole next to the first one, as indicated by the red arrow.

19 Place the second nut over the end of the screw (as arrowed), and lower it into the recess in the base of the mount. As before, hold the nut in place and tighten the screw by a few turns until it is held by the nut.

20 Holding both nuts in position, tighten the two screws by a few more turns.

21 Insert the 3 x 10mm screw from Stage 62 into the adjacent hole in the chassis, as shown above.

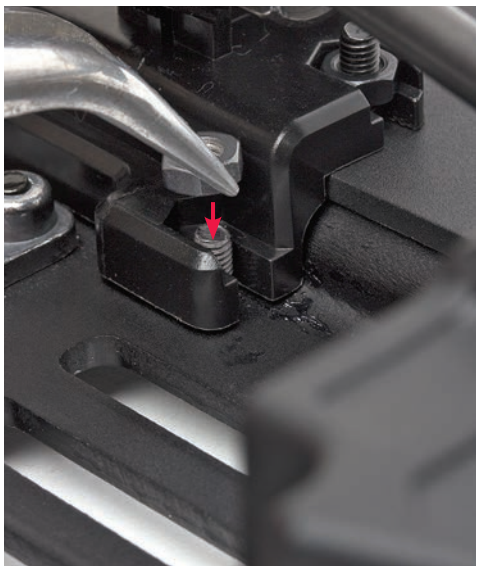

22 Take the 3mm nut from Stage 62 and place it in the remaining recess in the mount, over the end of the screw.

23 Tighten the screw fully into the nut, then go back and fully tighten the two 3 x 12mm screws as well. The heads of all three screws should be flush with the chassis.

24 The driveshaft assembly should now look like this, and the drivetrain of your RB7 racer is now complete. In the next stage, you can turn your attention to your model's powerplant, its GX21 nitro engine.

Stage 64

THE ENGINE CRANKCASE

THE CRANKCASE FORMS THE BASIS OF YOUR RB7 RACER'S GX21 ENGINE. BEFORE BEGINNING TO ASSEMBLE THE GX21, WE'LL TAKE A CLOSER LOOK AT THE CRANKCASE AND ITS COMPONENTS.

Tools & Materials

Angled needle-nose pliers

1 Crankcase

01 Viewed from above, the crankcase has two large holes. The larger of these is where the cylinder will be fitted, and the smaller hole, which is at the front end of the crankcase, is where the carburettor will be mounted. It will be clamped in place by the screw and nut that can be seen between the two holes.

02 The underside of the crankcase has two sets of mounting holes. Four 3 x 8mm pan head screws, which will be supplied with Stage 77, will screw into these holes to fix the crankcase to the engine mount from Stage 59.

03 Seen from the back, the crankcase can be divided into two parts. The upper part, which is fitted with cooling fins and includes the exhaust outlet, will house the cylinder (Stage 66). The lower part houses the two ball bearings that will support the crankshaft.

04 From the front, you can see the cooling fins at the top, the carburettor mount in the centre, and one of the crankshaft bearings at the bottom.

05 Using pliers, remove the carburettor attaching screw and its nut from the rear of the carburettor mount. Now you will be able to see the semi-circular cut-out in the shaft of the screw, which will fit snugly against the circular base of the carburettor to hold it firmly in place. Replace the screw and nut so that they don't get lost.

DeAGOSTINI
MODEL SPACE™

Red Bull Racing
FORMULA ONE TEAM