DeAGOSTINI MODEL SPACE™

Red Bull Racing
FORMULA ONE TEAM

RB7

RADIO CONTROLLED • BUILD IT YOURSELF • NITRO ENGINE

Pack 15

Stages 57-60

DeAGOSTINI MODEL SPACE™

Red Bull Racing FORMULA ONE TEAM

RB7

Contents

Visit our website www.model-space.com

DeAGOSTINI MODEL SPACE™

Editorial and design by Continuo Creative, 39-41 North Road, London N7 9DP

RED BULL RACING RB7 complies with CE regulations.
NOT SUITABLE FOR CHILDREN UNDER THE AGE OF 14. THIS PRODUCT IS NOT A TOY AND IS NOT DESIGNED OR INTENDED FOR USE IN PLAY. ITEMS MAY VARY FROM THOSE SHOWN.

UNDERSTANDING GEAR RATIOS

RC CARS MAY BE FITTED WITH EITHER A SINGLE-SPEED OR MULTI-SPEED TRANSMISSION. IT IS IMPORTANT TO UNDERSTAND THE PRINCIPLES INVOLVED, ESPECIALLY IF YOU WANT TO FINE-TUNE YOUR GEAR RATIOS OR CHANGE FROM ONE TYPE TO THE OTHER.

In motorised vehicles – especially model cars – the engine's crankshaft rotates at high speed. In the case of the engine of your RB7 racer, this is anywhere between about 2500 and 30,000rpm. This is so fast that the number of revolutions must be reduced to suit the speed at which the rear wheels can turn when the car is in motion, a process called gearing down. This happens in the gearbox, which contains two or more gearwheels of different sizes. On the engine side, the drivetrain starts with a small pinion that is located on the clutch bell. This pinion meshes with the larger spur gear, which is mounted on the gearbox mainshaft.

The transmission ratio of a single-speed gearbox is determined by the number of teeth on the pinion gear on the clutch bell (on the right) and by the number on the spur gear (on the left).

The individual components of the single-speed transmission in your model are:
(1) Front centre diff housing, (2) main shaft, (3) ball bearing, (4) spur gear holder, (5) spur gear, (6) ball bearing, (7) rear centre diff housing, (8) cup joint on the gearbox output shaft. After the gearbox, the power is transmitted through a short driveshaft (9), two cup joints and ball bearings (10) fitted into the driveshaft mount (11), and on via the differential to the rear axle and wheels.

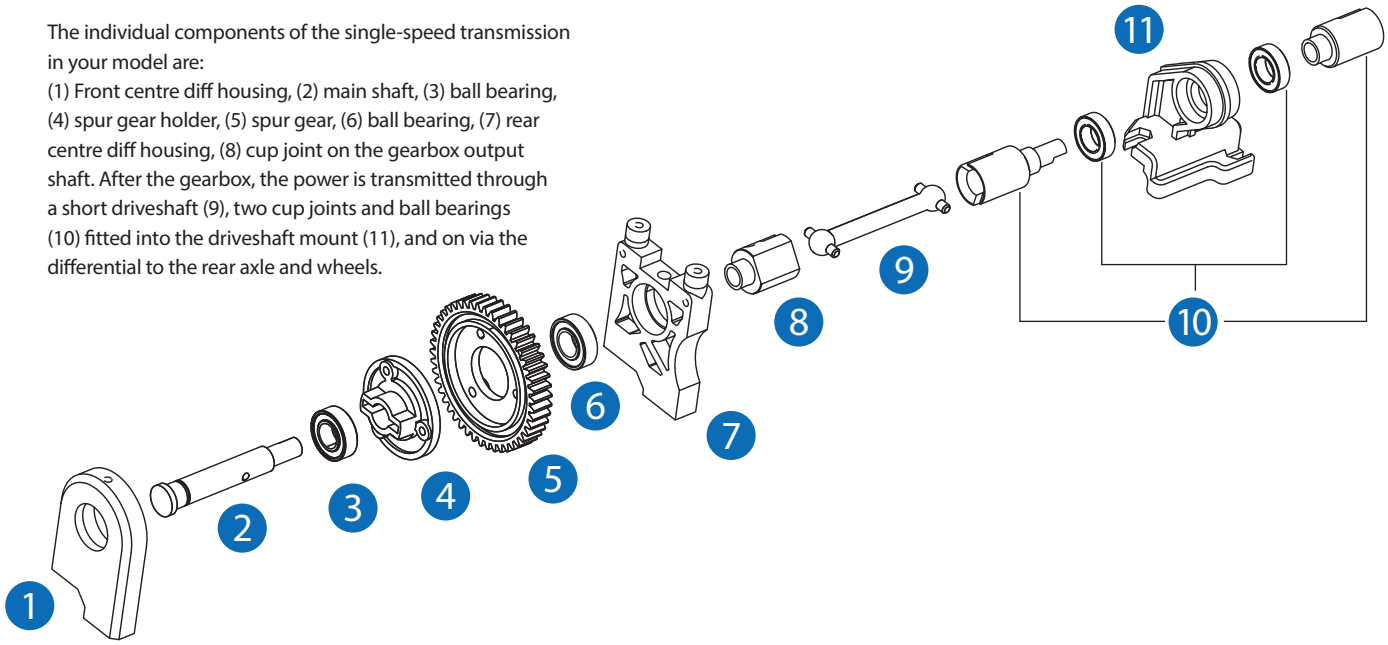

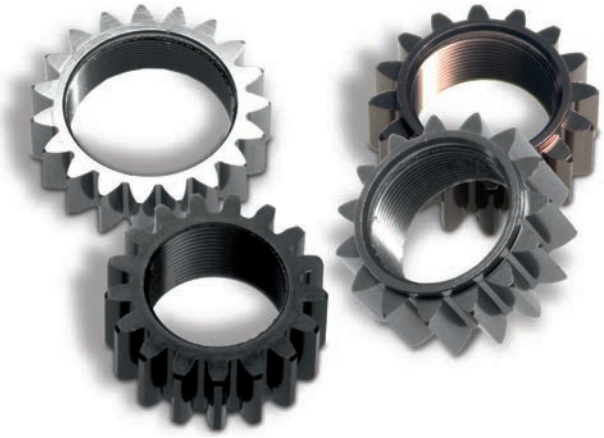

Custom pinions with different numbers of teeth can be mounted on the clutch bell to change the primary transmission ratio. The more teeth it has, the faster the main spur gear will rotate.

GEARBOX RATIOS

These two gears reduce the high-speed revolutions of the engine to a lower number of turns in a ratio that is determined by the number of teeth on the two different-sized wheels. In your model RC car, the smaller pinion has 14 teeth, while the spur gear has 46 teeth. When these two are meshed together, the crankshaft has to turn about 3.3 times (46 divided by 14) before the spur gear completes one revolution. This is known as the primary reduction ratio of the gearbox.

Although the driveshaft is now turning slower than the engine, it is still too fast for the rear wheels to turn. The speed is further reduced at the rear axle by the drive bevel gear, which engages with the ring gear of the differential. In your model, these have 13 and 43 teeth, meaning that the wheels turn about 3.3 times (43 divided by 13) more slowly than the driveshaft.

To work out the number of engine revolutions that reach the tyres, multiply the ratio of the gearbox by that of the differential. In your RB7 racer, this overall ratio is 10.9:1. Why is it useful to know this? One reason is to have an idea of how fast your car can go. Based on a wheel diameter of about 8.9cm, it follows that the car advances about 28cm per wheel revolution. If you increase the GX-21 engine to 30,000rpm, the tyres will rotate 2750 times per minute and cover a distance of 770 metres. This represents a speed of 46.5km/h – a scale speed of 325km/h!

TOP SPEED AND ACCELERATION

A common way of changing the top speed and acceleration of an RC car is to replace the engine pinion and/or the main spur gearwheel with special custom parts. If the pinion has

An overhead view of the transmission of your RB7 racer: the pinion is meshed with the spur gear (see red box). From there, two driveshafts convey the power to the differential.

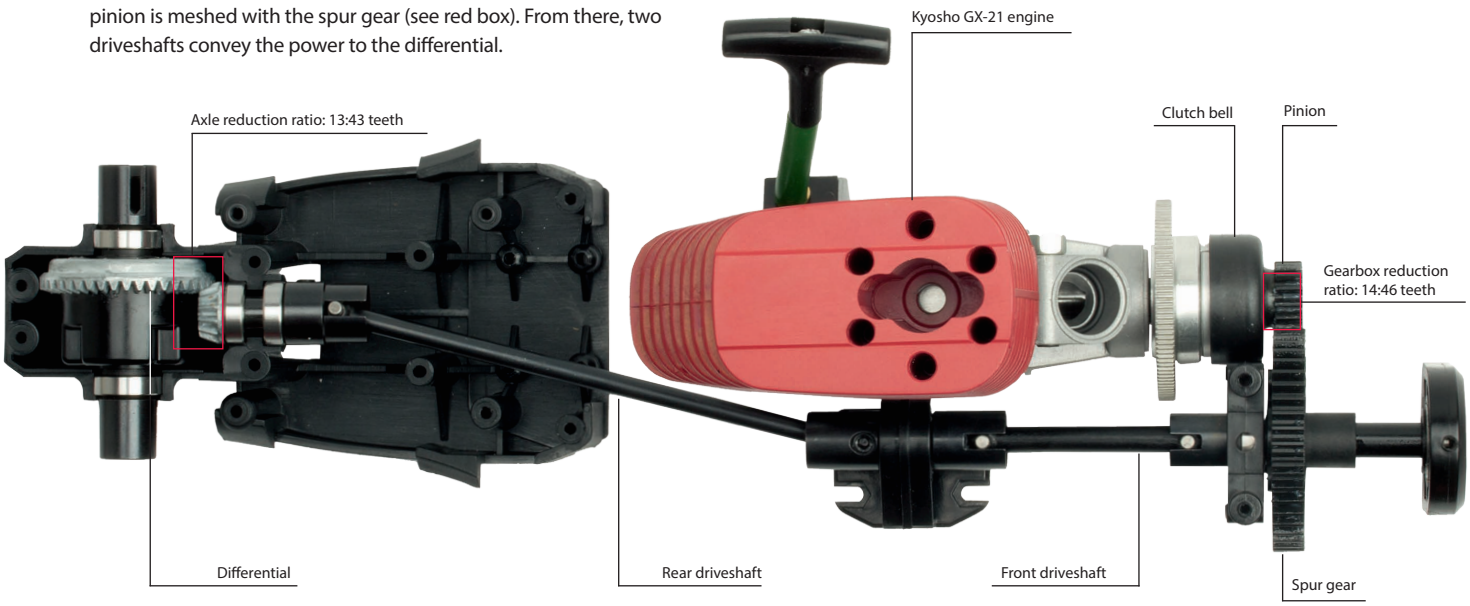

Another way to achieve a lower drive reduction ratio is to replace the main spur gear. The fewer teeth it has, the faster the driveshaft will rotate.

a larger number of teeth than the basic set-up, or the spur gear has a smaller number, the number of engine revolutions will not be geared down so much – in other words, the reduction ratio will be lower. Consequently, the drive wheels will turn faster and the top speed will increase.

But before you throw yourself into a mad search for the 'hottest' gearwheel combination, you should remember that on the circuit, acceleration out of a corner is often more important than outright top speed. The gearbox reduction ratio of your RB7 racer has been chosen for a good reason, which is so that the maximum engine output is available in the critical region between 20 and 40km/h. The amount of torque available in this speed range is often decisive to the outcome of the race. Drivers who adjust the gear ratios too far towards maximum possible speed run the risk that the engine will perform poorly on corners because it cannot develop adequate torque at low speeds.

The single-speed gearbox of your RB7 racer has been set up to ensure maximum fun for novice drivers. For more expert RC drivers, it may be sensible to adjust the gearbox to the conditions of particular circuits and their own driving skills by fitting custom pinions or changing the spur gear. Once you have acquired enough experience of the car and a given circuit, you can consider adapting your gear ratios.

MULTI-SPEED GEARBOXES

The reduction ratio provided by a single-speed gearbox cannot be changed while driving, so the gear ratio chosen is always a compromise. A means of achieving the optimum engine output both while accelerating and at maximum speed is to replace the single-speed gearbox with a multi-speed one.

Your RB7 racer has been designed to allow for the alternative fitting of a two-speed gearbox. So far as the engine is concerned, this means replacing the clutch bell with a different one containing two drive pinions of different sizes, arranged one behind the other. To do this, you must mount a suitable clutch shaft on your model car. In terms of the gearbox, the spur gear must be replaced by a combination of two gearwheels with different numbers of teeth. Suitable gearbox units have two gearwheels and an integrated gearchanging mechanism (centrifugal clutch).

You can upgrade your RB7 racer very effectively by replacing the single-speed gearbox supplied with your model (left) with a clutch bell that has a double pinion, and a two-speed gearbox (right). This option will be discussed in more detail in a later article.

Stage 57

MAIN SHAFT CUP JOINT

IN THIS SESSION, YOU WILL ADD A CUP JOINT AND BALL BEARING TO THE END OF THE MAIN SHAFT AND THE SPUR GEAR ASSEMBLY THAT YOU PUT TOGETHER IN THE PREVIOUS STAGE.

Tools & Materials

Allen key (2.5mm)
Thread-locking compound

1. Cup joint
2. Ball bearing 8 x 16 x 5mm
3. Set screw 5 x 4mm

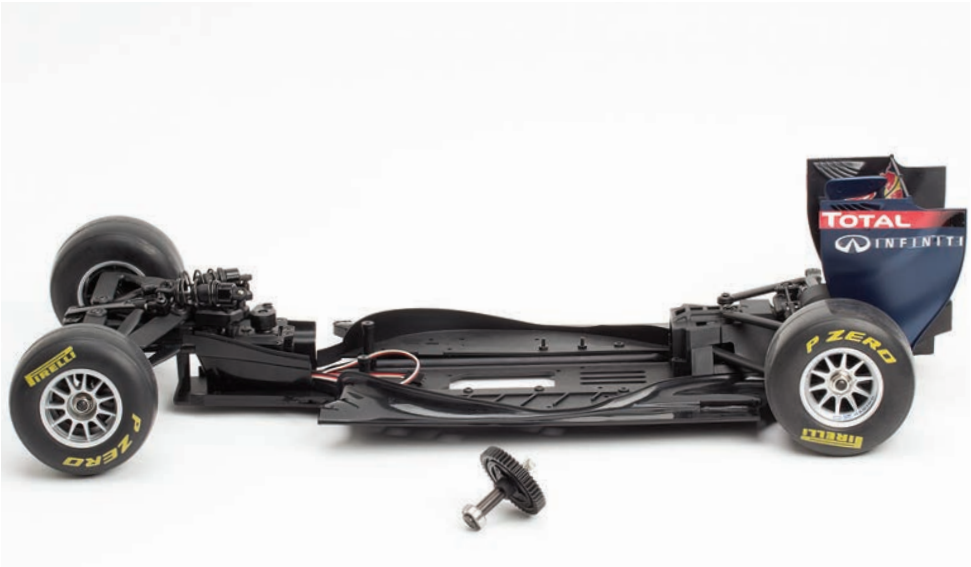

01 In this stage, you will need the main shaft and spur gear assembly that you put together last time. You won't need the main assembly of your RB7 again until the next stage, when you will fit the two throttle mounts.

02 Position the main shaft and spur gear assembly from the previous stage as shown, and remove the tape that is temporarily holding the shaft and the gear together.

03 Take the cup joint and identify the slots in the sides of the wider end and the threaded hole in the centre. The narrower end fits into the ball bearing.

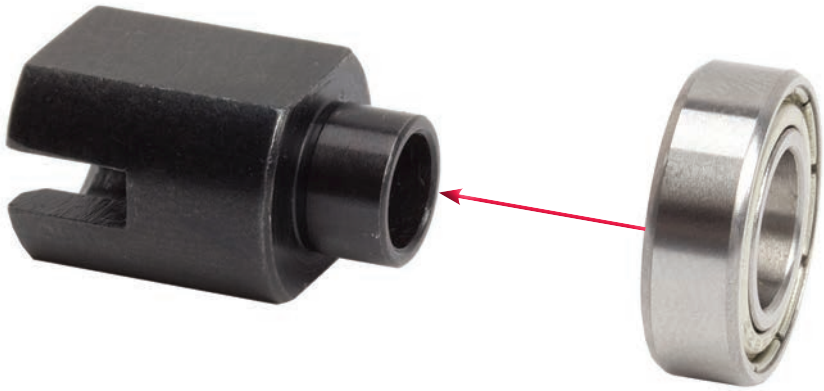

04 Hold the cup joint at its wider end, and place the ball bearing over its narrower end, as indicated by the arrow.

05 Press the ball bearing onto the end of the cup joint as far as it will go. The end of the joint must be flush with the inner part of the bearing.

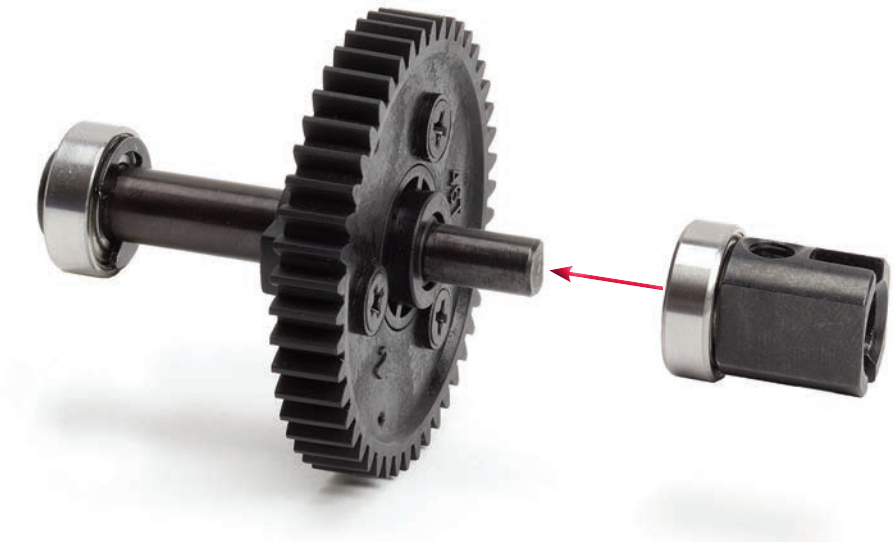

06 Place the narrow end of the cup joint (the end with the ball bearing) onto the end of the main shaft, as shown by the arrow. As you do this, make sure that the shaft and its locking pin don't slip out of the spur gear.

07 The end of the cup joint and the ball bearing should now be flush with the raised section in the centre of the gear.

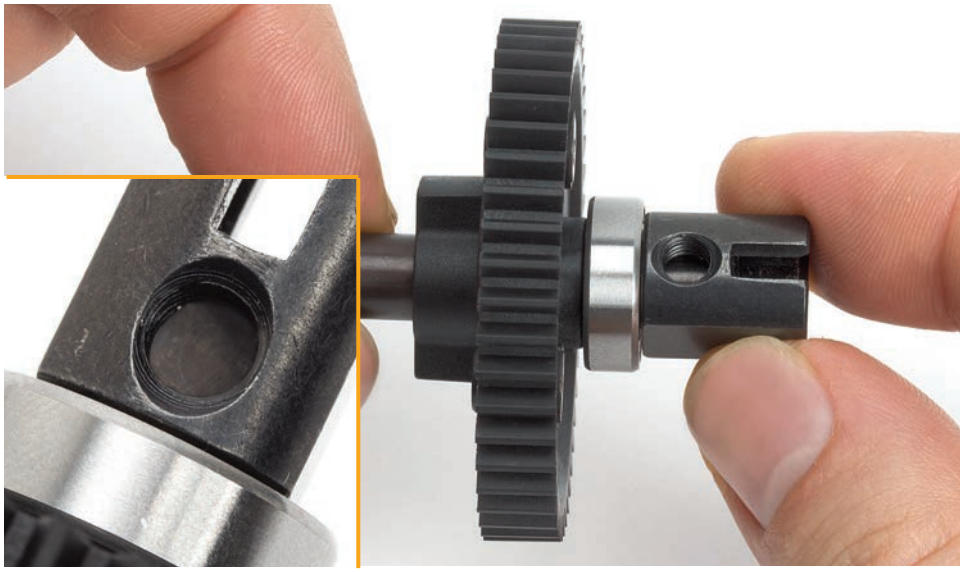

08 Turn the shaft while holding the cup joint until the flat side of the shaft is visible through the threaded hole on the joint (see inset). Check that all the parts of the assembly are still in their correct positions, as shown in the main picture.

09 To prevent the screw coming loose while driving, place a small drop of thread-locking agent into the threaded hole in the cup joint.

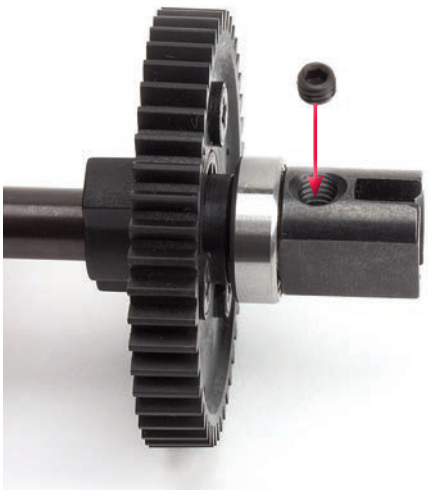

10 Take the set screw and place it into the threaded hole.

11 Use the 2.5mm Allen key to tighten the set screw into the threaded hole in the cup joint.

12 The set screw shouldn't protrude from the hole in the cup joint. If it does, it may not have gone in straight, so take it out, re-insert it so that it is correctly aligned, and re-tighten it.

13 Looking at the end of the assembly, you should be able to see the end of the set screw protruding from the inside of the cup joint and pressing onto the flat of the shaft, as shown.

14 Your assembly should now look like this. Check that the parts rotate smoothly within the bearings.

Stage 58

BRAKE ROTOR AND SERVO MOUNTS

BEGIN ASSEMBLING YOUR RB7 RACER'S BRAKING SYSTEM BY PUTTING THE BRAKE ROTOR ONTO THE MAIN SHAFT, AND THEN FIXING THE TWO THROTTLE SERVO MOUNTS ONTO THE CHASSIS.

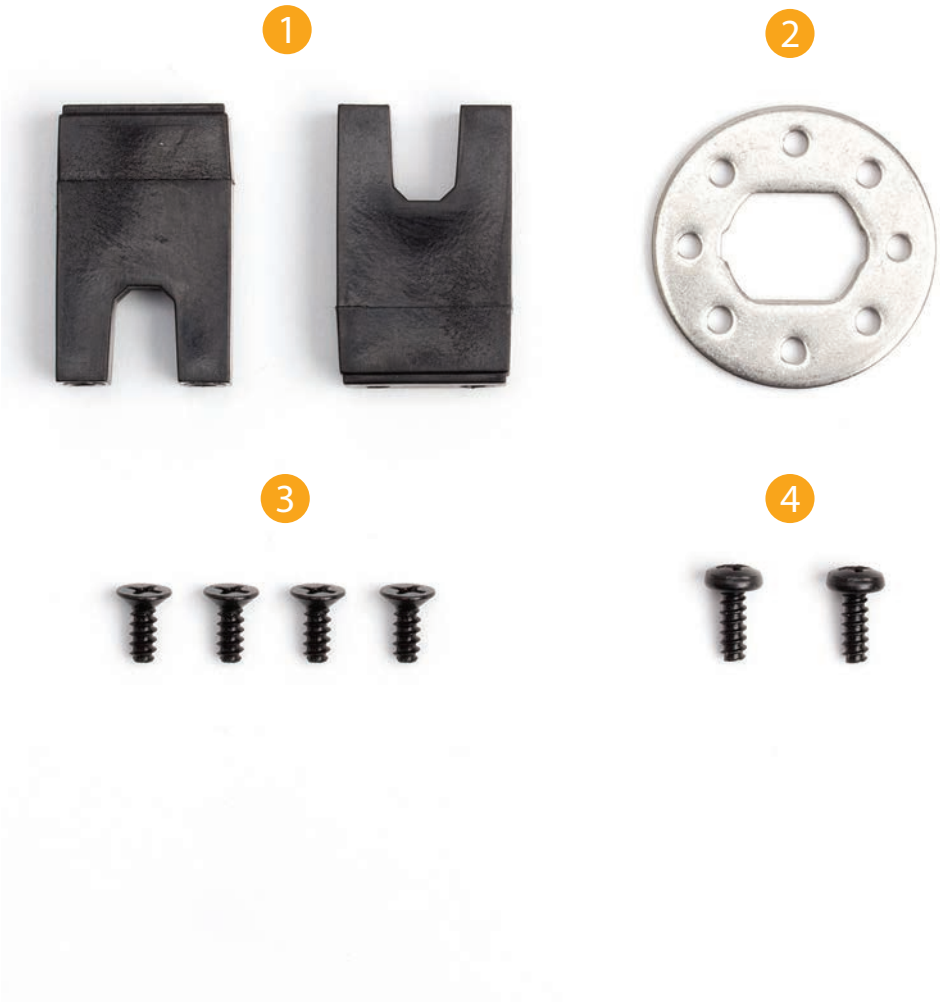

Tools & Materials

- Phillips screwdriver (size 2)
- Adhesive tape

1. Throttle servo mounts
2. Brake rotor
3. 4 countersunk screws 3 x 8mm
4. 2 pan head screws 3 x 8mm

01 In this stage, you will need the main shaft and spur gear assembly that you worked on last time, plus your RB7's chassis assembly.

02 The brake rotor is made of die-cast metal, with eight holes drilled around it to improve ventilation so that it doesn't get too hot and lose friction during use. The large hole in the centre matches the shape of the cup joint on the main shaft.

03 Take the brake rotor and place it over the end of the cup joint on the main shaft and gear assembly from the previous stage. Push it down the joint until it rests on the bearing.

04 Temporarily tape the rotor in place on the gear assembly.

05 Locate the two holes near the front of the chassis and align the two holes at the bottom of one of the servo mounts with them, making sure the flat side of the mount is facing towards the rear of the car.

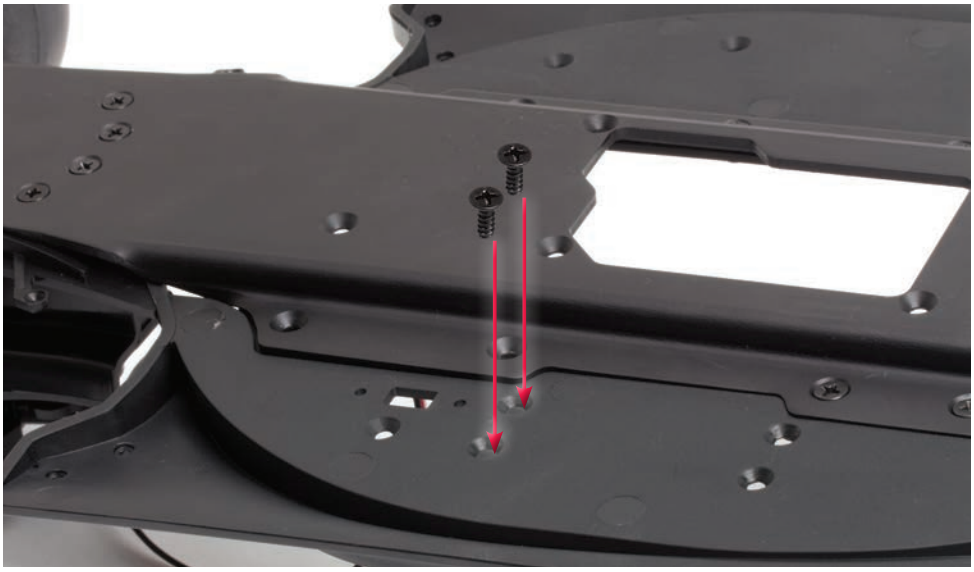

06 Turn the chassis over and insert two 3 x 8mm countersunk screws into the two holes. Tighten them until they engage with the threaded holes in the servo mount.

07 Tighten the screws fully into the countersunk holes, securing the servo mount in place on the chassis.

08 This is how the servo mount should now appear. If yours looks different, check that you followed Steps 05 to 07 correctly. There should be no gap between the mount and the chassis.

09 Take the second servo mount and place it over the two holes to the rear of the first mount, positioned with the flat side facing towards the front of the car.

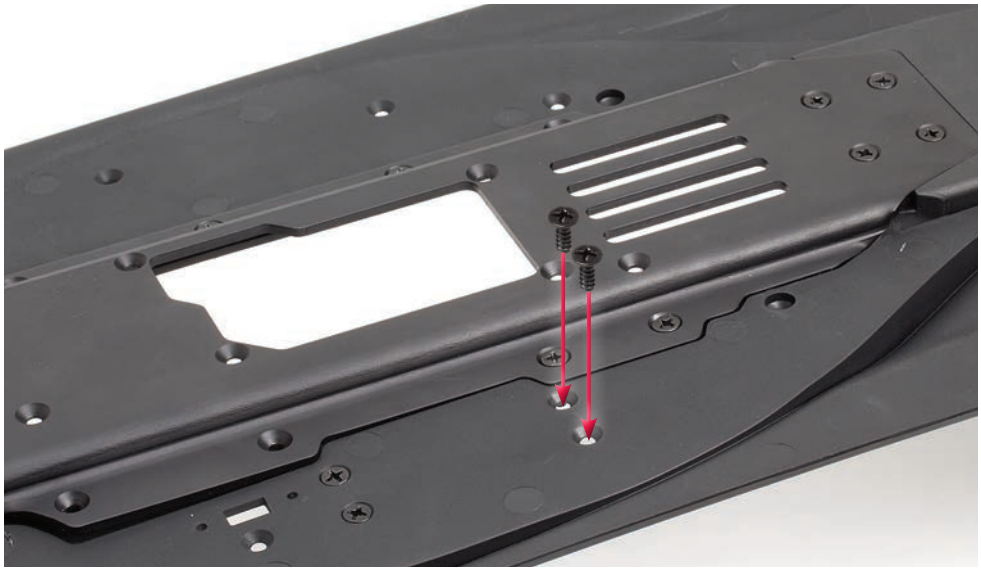

10 Turn the chassis over again and tighten the remaining two 3 x 8mm countersunk screws into the two holes in the chassis until they engage with the threaded holes in the bottom of the servo mount.

11 Tighten the screws fully into the countersunk holes, fixing the servo mount securely in place on the chassis.

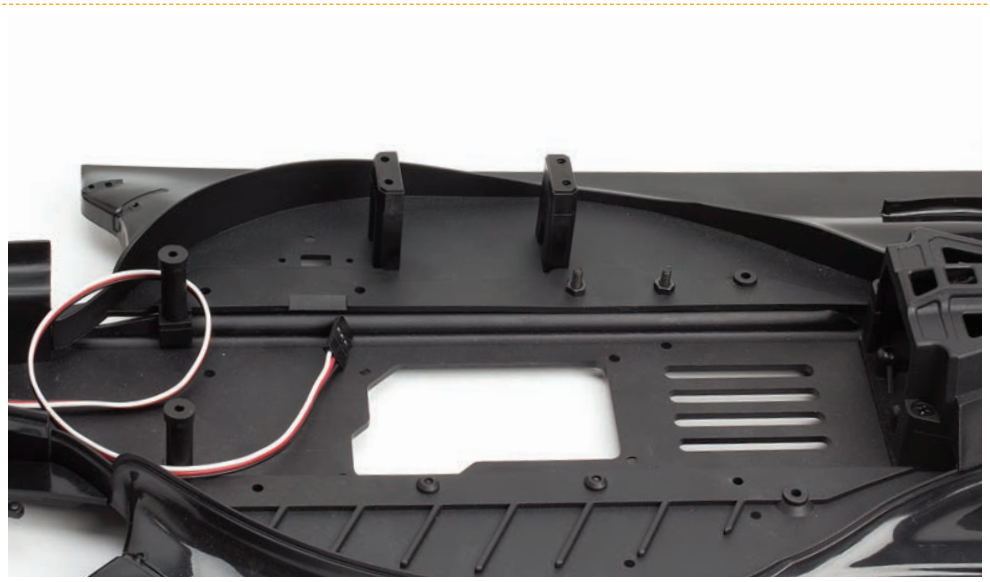

12 If you have followed the steps correctly, your chassis should now look like this. The two servo mounts should be anchored securely on the right-hand side of the chassis, with the flattened sides of the mounts facing each other. Keep the two unused pan head screws in a safe place for later use.

Stage 59

THE ENGINE MOUNT

THE ENGINE MOUNT SUPPLIED WITH THIS STAGE IS SCREWED TO THE CHASSIS TO MAKE A SOLID, HEAT-RESISTANT BASE FOR YOUR MODEL'S POWERPLANT.

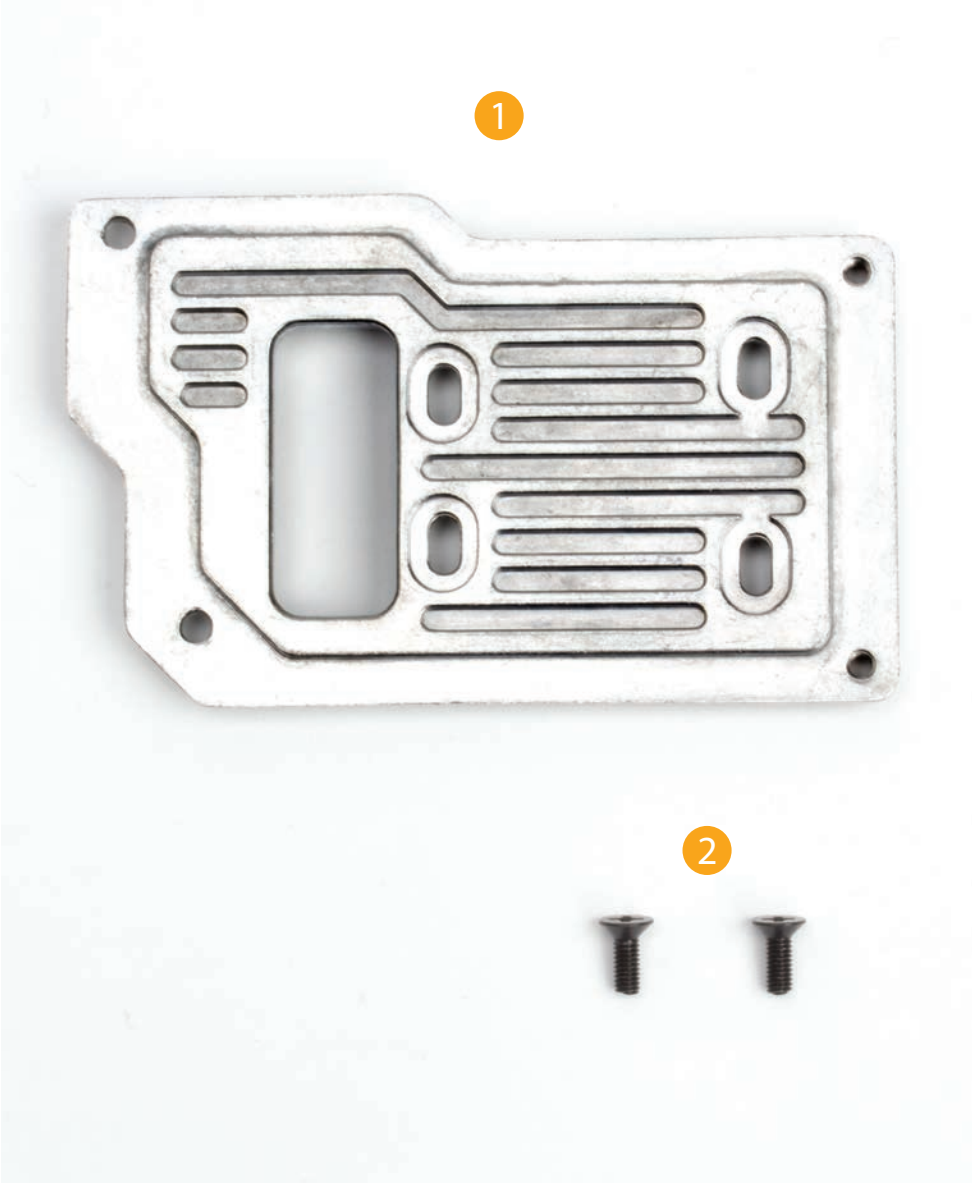

Tools & Materials

Phillips screwdriver (size 2)

1. Engine mount
2. 2 countersunk screws 3 x 8mm

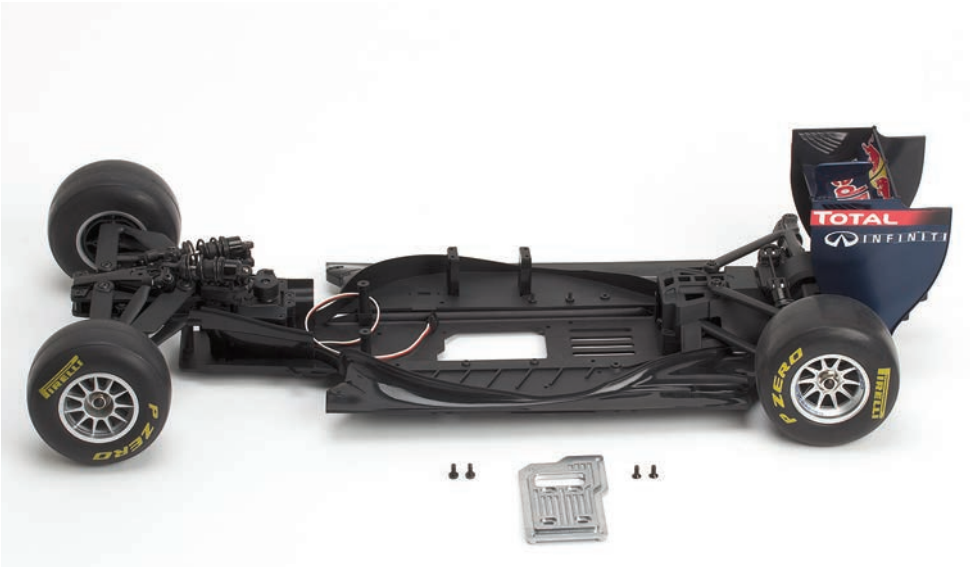

01 Have the chassis, the two 3 x 8mm pan head screws from Stage 58 and the parts from this pack in front of you.

02 Tighten a 3 x 8mm pan head screw into one of the holes in the rear throttle servo mount that you fitted last time.

03 Tighten the second pan head screw into the second hole.

04 The two servo mounts should now look like this. Screws will be provided for the front mount at a later stage in the build.

05 The engine mount is made of hardened light alloy. The surface isn't black, like the rest of the chassis, as the heat produced by the engine would burn away any paint on the mount.

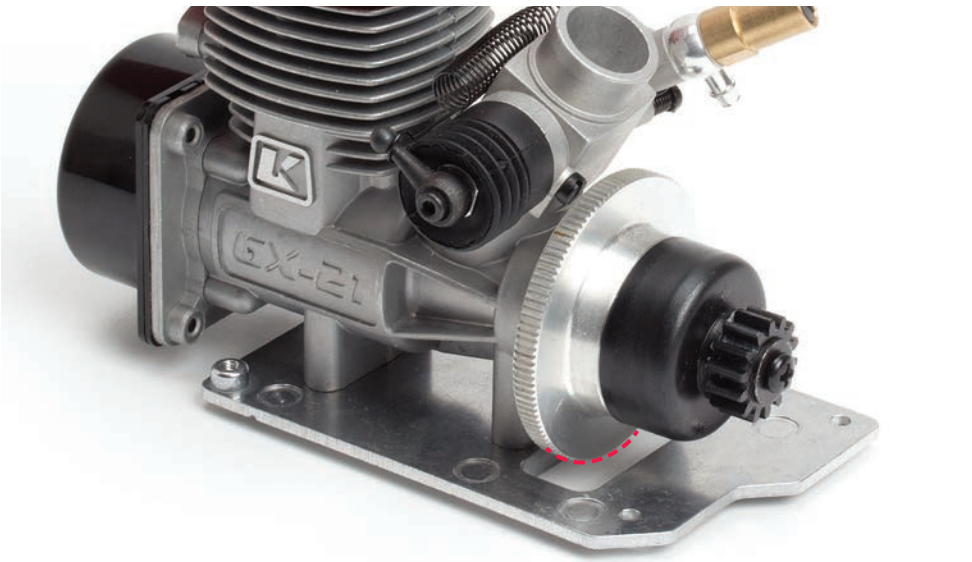

06 The engine mount is also thicker than the rest of the chassis, reducing the risk of damage and providing a stable base for the engine. The 3 x 1.5cm window at the front of the mount provides the clearance necessary for the flywheel (dotted red line) to rotate freely.

07 The underside of the mount has cut-out areas to aid cooling. The holes in the corners are used to fix the mount to the chassis, and the four oval holes will house the screws that hold the engine in place.

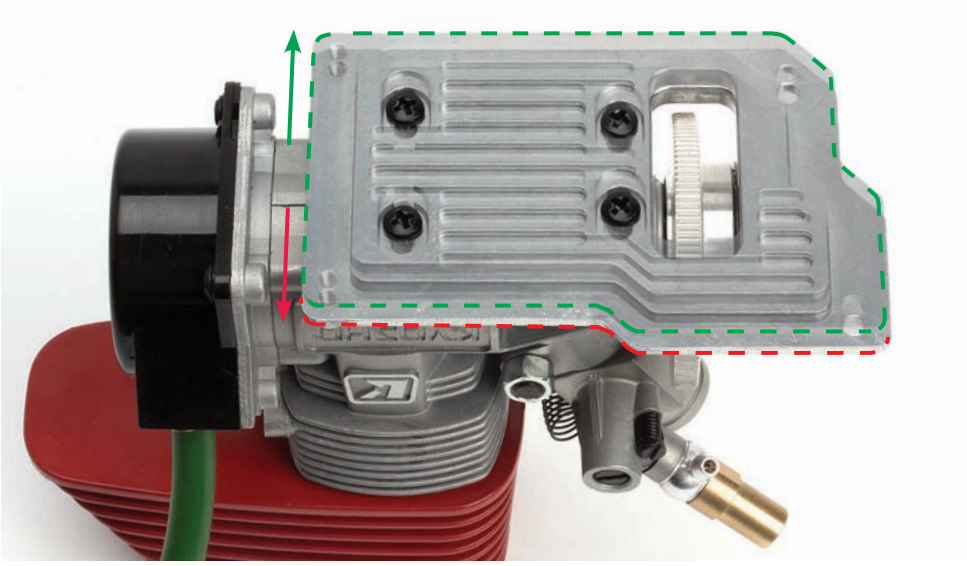

08 The oval shape of the holes makes it possible to adjust the position of the engine during assembly (shown by the arrows and dotted outlines), to achieve the best position for it in relation to the other parts, such as the transmission. The shape also makes it easier to remove the engine on its own if you have to service or replace parts.

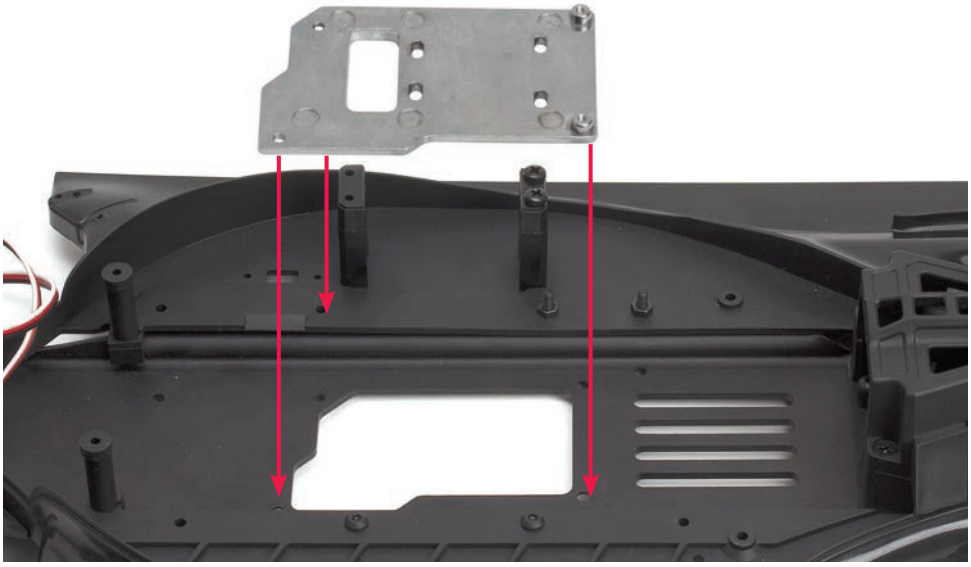

09 Place the engine mount in the central section of the chassis, aligning the holes in the corners of the plate with those in the chassis (arrowed).

10 Hold the mount in position with one hand and turn the chassis over. Put one of the 3 x 8mm countersunk screws into one of the countersunk holes and tighten it into place with a screwdriver.

11 Repeat Step 10 for the second countersunk screw. The tops of the heads of the two screws should be flush with the chassis.

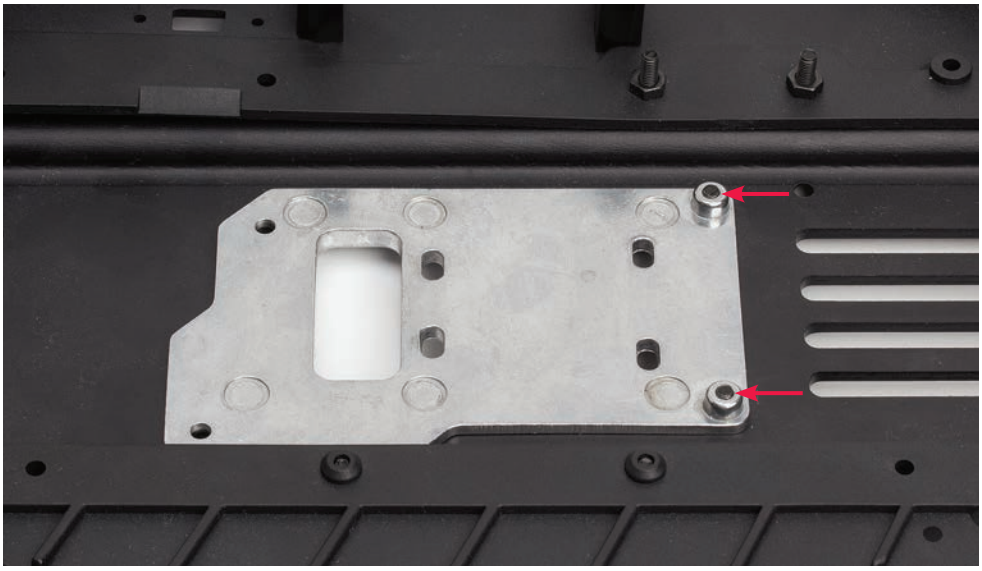

12 On the inside of the chassis, the ends of the two screws should project slightly beyond the tops of the projections, as indicated by the red arrows.

Stage 60

FITTING THE MAIN SHAFT

IN THIS STAGE, YOU WILL FIX THE CENTRE DIFFERENTIAL HOUSINGS TO THE CHASSIS AND INSTALL THE MAIN SHAFT OF THE TRANSMISSION, THEN ASSEMBLE THE BRAKE CALIPERS AND PADS.

Tools & Materials

- Phillips screwdriver (size 2)
- Tape

1. Front centre diff housing
2. Rear centre diff housing
3. 2 brake pads
4. 2 brake calipers
5. 2 oval head screws 3 x 12mm
6. Countersunk self-tapping screw 3 x 10mm
7. 3 countersunk self-tapping screws 3 x 12mm

01 For this stage of the assembly, you will need your RB7's chassis, the main shaft and brake rotor from Stage 58, and the parts supplied with this stage.

02 This is the inner side of the front centre differential housing, which will hold the front end of the main shaft.

03 Place the front housing near the front of the chassis, aligning the two holes at the bottom with the corresponding holes in the chassis (arrowed).

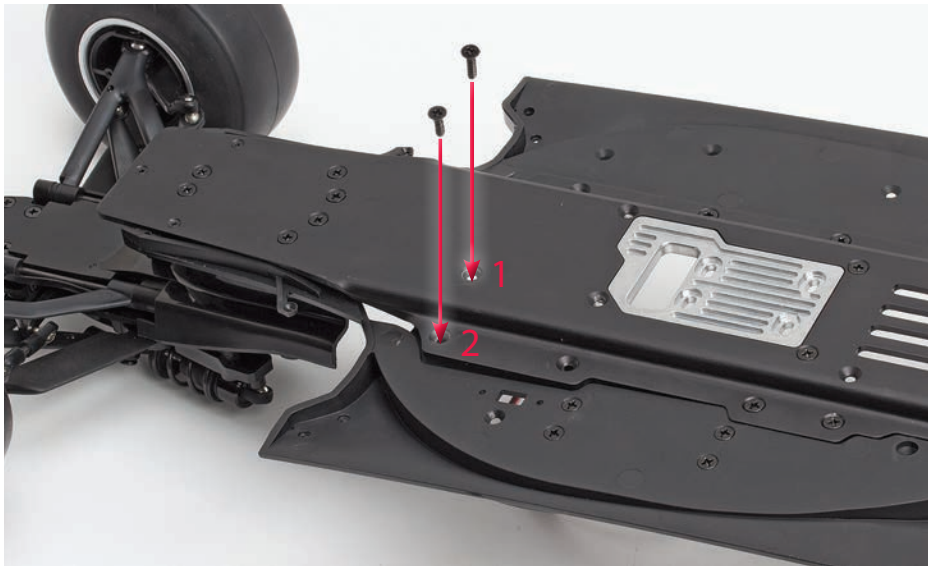

04 Hold the front housing in position and turn the assembly over. Take a 3 x 12mm countersunk screw and turn it as far as you can by hand into hole 1 (arrowed). Then turn the 3 x 10mm screw into hole 2.

05 Tighten both screws, using a screwdriver.

06 Turn the model back over and check that the front centre diff housing is positioned as shown. It must be firmly fixed to the chassis plate – if not, loosen the two screws, adjust the housing until the position is correct, and re-tighten the screws.

07 Place the main shaft as shown, remove and discard the tape, and take off the brake rotor.

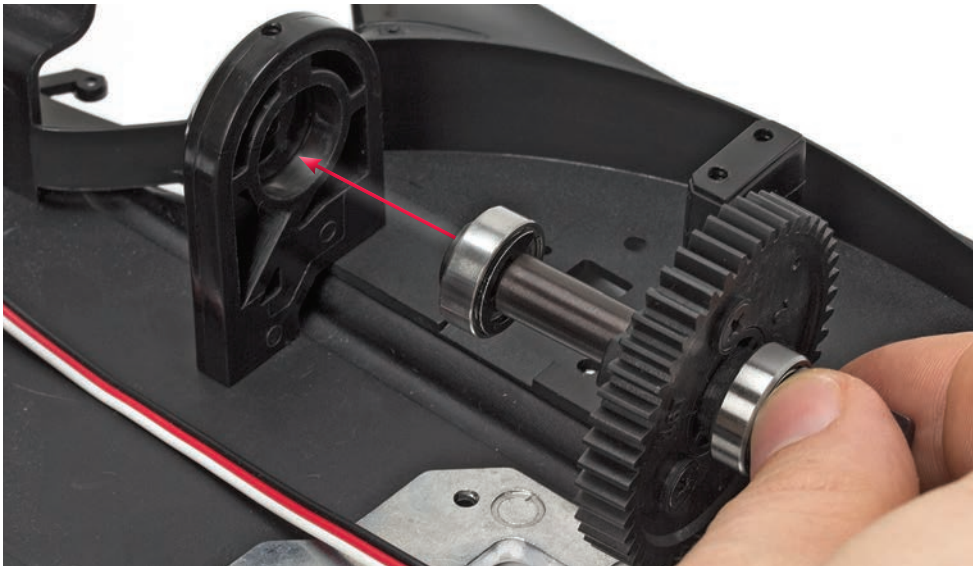

08 Holding the cup joint at the rear end of the main shaft, insert the front end of the shaft into the hole in the front differential housing (arrowed).

09 The photo above shows how the bearing on the front end of the main shaft should sit in the hole in the front centre differential housing.

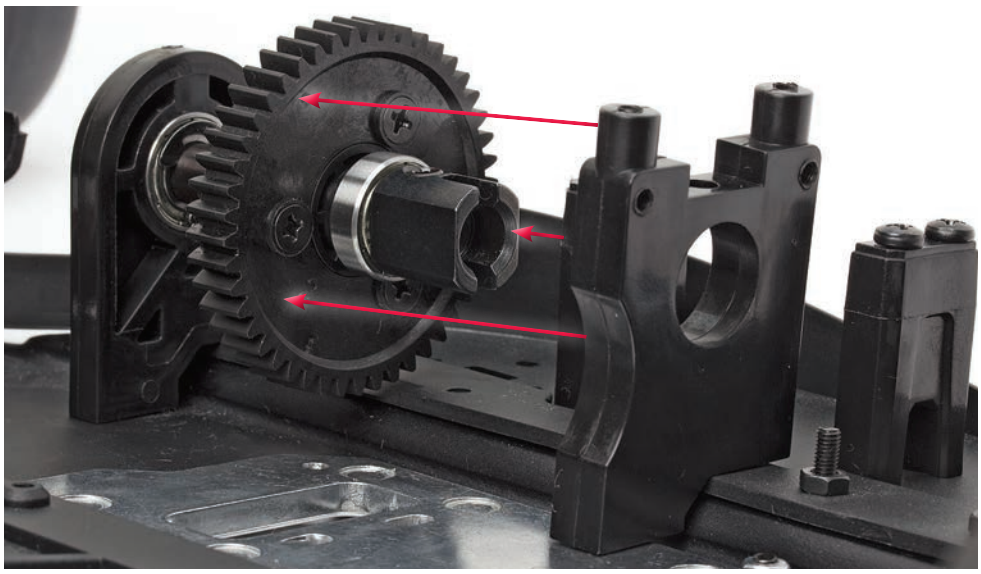

10 Place the rear centre differential housing on the chassis, behind the spur gear, as shown. The rear of the housing, the smooth side, will be facing the rear of the model. Slide the housing along the chassis and over the cup joint until the bearing is resting inside the central hole.

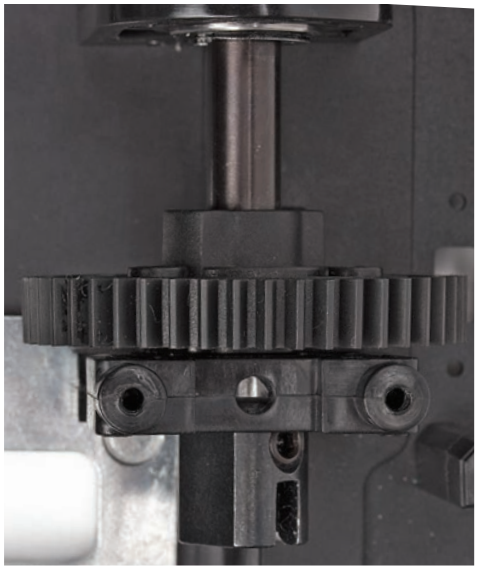

11 When viewed from above, the rear housing should appear as shown, close to the spur gear and completely covering the bearing.

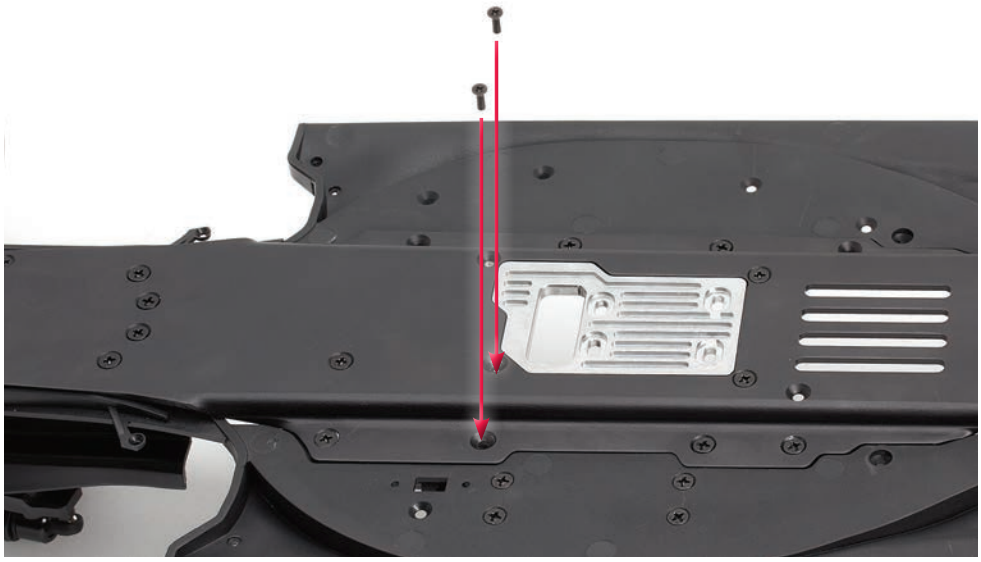

12 Turn the model over, and check that the holes on the underside of the rear housing are visible through the two holes in the bottom of the chassis. If they are not, adjust the housing slightly back or forward until the holes are aligned. Then tighten a 3 x 12mm countersunk screw into each hole (red arrows).

13 Using your Phillips screwdriver, fully tighten both screws into place.

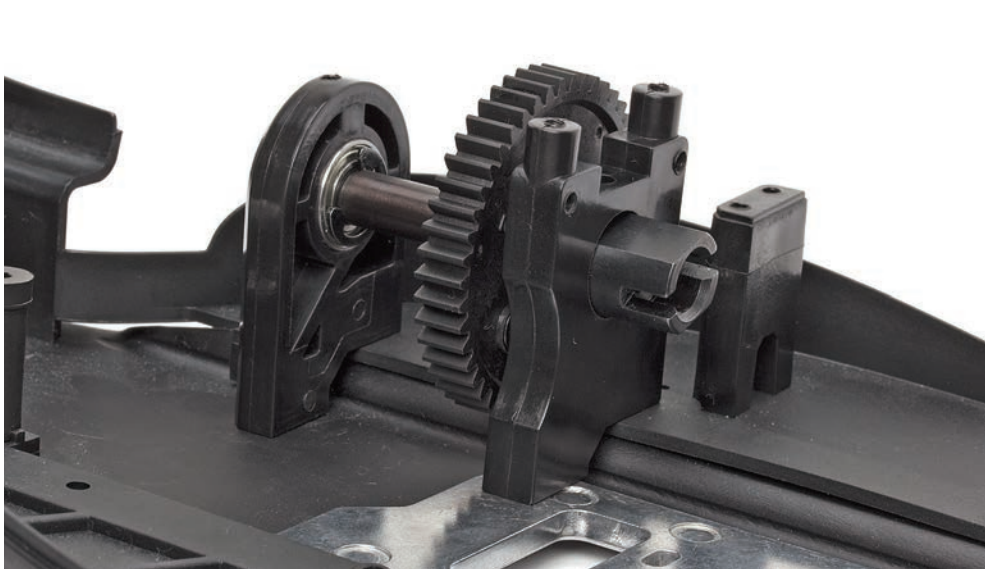

14 Turn the model over again. If there is a gap between the chassis and the rear housing, loosen the two screws and re-tighten with the housing positioned correctly.

15 Take one of the two brake calipers and insert one of the 3 x 12mm oval head screws into the circular hole.

16 Turn the caliper over and place one of the brake pads onto it, with the circular hole in the pad over the screw.

17 Place the second brake pad on top of the first, again with the circular hole over the screw.

18 Place the second brake caliper on top of the pads, with its circular hole over the screw (see red arrow).

19 Check that the oval holes of the calipers and pads are aligned (see dotted red line). If they are not, remove and reposition the parts.

20 Take the second 3 x 12mm oval head screw and place it into the oval hole.

21 Wrap the two screw threads with tape to hold the calipers and pads in position.

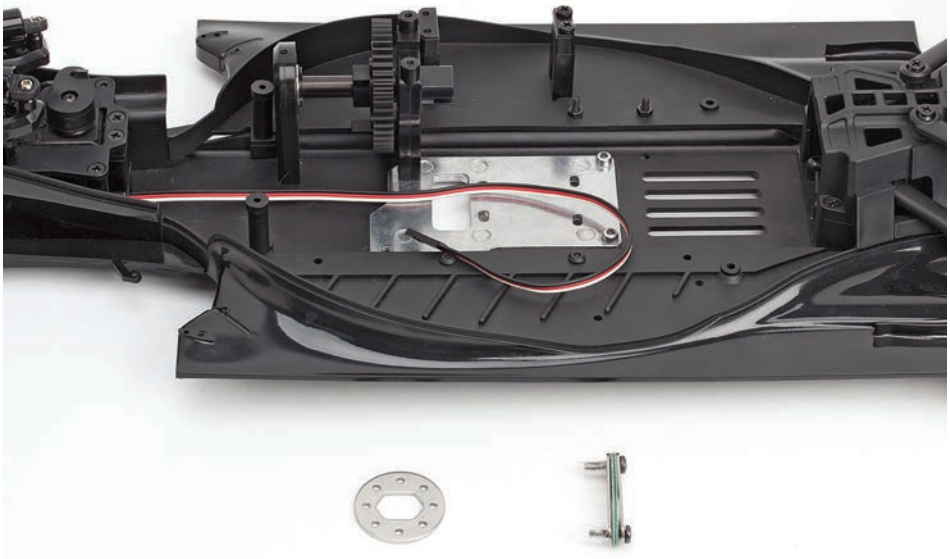

22 You now have the main shaft assembly of your Red Bull Racing RB7 in place on the chassis. The brake rotor, shoes and calipers will be fitted to the main shaft in the next stage, so store them carefully until then.

DeAGOSTINI
MODEL SPACE™

Red Bull Racing
FORMULA ONE TEAM