DeAGOSTINI MODEL SPACE™

Red Bull Racing
FORMULA ONE TEAM

RB7

RADIO CONTROLLED • BUILD IT YOURSELF • NITRO ENGINE

Pack 14

Stages 53-56

DeAGOSTINI MODEL SPACE™

Red Bull Racing FORMULA ONE TEAM

RB7

Contents

Visit our website www.model-space.com

DeAGOSTINI MODEL SPACE™

Editorial and design by Continuo Creative, 39-41 North Road, London N7 9DP

RED BULL RACING RB7 complies with CE regulations.
NOT SUITABLE FOR CHILDREN UNDER THE AGE OF 14. THIS PRODUCT IS NOT A TOY AND IS NOT DESIGNED OR INTENDED FOR USE IN PLAY. ITEMS MAY VARY FROM THOSE SHOWN.

ADJUSTING GROUND CLEARANCE

THE DISTANCE BETWEEN THE CHASSIS AND THE GROUND HAS A DECISIVE INFLUENCE ON A CAR'S ROADHOLDING, AS A LOW CENTRE OF GRAVITY REDUCES THE BODY LEAN. HERE'S HOW YOU CAN ADJUST THE GROUND CLEARANCE OF YOUR RB7 RACER.

One of the commonest ways of tuning a mass-produced car is by lowering its centre of gravity to give it sportier handling on the road. On a full-sized car, the necessary modifications must usually be carried out by specialist workshops, but the RC car driver can adjust a model's ground clearance unaided.

The chassis set-up of your RB7 racer can also be adapted to suit your driving style and the type of circuit. You will find the necessary theoretical information for doing this in the following pages, as well as some vital practical tips. But because a certain amount of experience is required to adjust the ground clearance correctly, we recommend that at first you should leave it at the standard setting described in the relevant Assembly Guide.

A QUESTION OF DISTANCE

Generally, the term 'ground clearance' refers to the distance between the lowest point of the vehicle and the surface of the road or track. But in an actual car, several parts, such as the exhaust pipe and the gearbox, are lower than the chassis. In order to accurately measure ground clearance, it is important to decide at which point it is to be measured.

The standard measurement – which is also used in the technical inspection and testing of a full-sized car – is the distance between the ground and the top of an imaginary arc below the axle (see photo at top of page 230). In this way, it is possible to establish how high an obstacle on the road can be without parts of the axle or the differential grounding when driving over it.

In this ghosted view of your model's chassis, it is easy to see that the ground clearance beneath the floor pan is slightly less than that of the front spoiler. When adjusting the ground clearance, you must always take both these measurements into account.

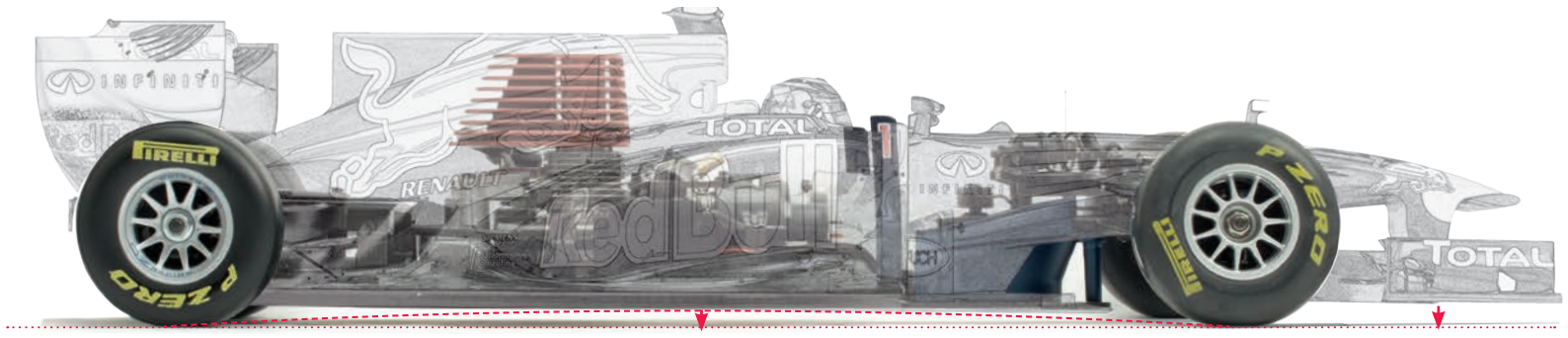

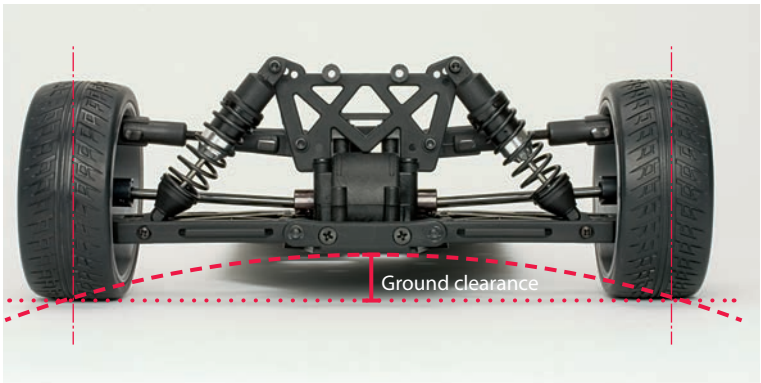

This illustration shows the ground clearance at the rear axle of a typical RC model car. It corresponds to the height of the circular arc through the lowest point of the chassis and the contact points of the tyre centres with the road surface.

The other important measurement of ground clearance is the top of a lengthwise arc drawn between the front and rear wheels and the underside of the chassis (see illustration on page 229). This measurement – also known as 'belly clearance' – determines how steep a slope or ramp can be without the underbody of the car touching the road as it drives up and down over the bump.

In a full-sized car, the fuel tank and exhaust pipes must also be taken into account to establish the ground clearance accurately, but the process is much easier in RC cars. This is because the underbody is flat and all the parts of the transmission are mounted on its upper side.

CLEARANCE AND ROADHOLDING

The vehicle or model car owner must also check the ground clearance of the extra aerodynamic parts mounted on the body, which are often placed low down in order to gain maximum effect. It is not only in racing cars that the front spoiler, rear diffuser and side skirts may be the first parts of the vehicle to come into contact with the road surface.

Why do not only professional racing mechanics but also private tuners fight for every centimetre when trying to get the car as close to the road surface as possible? The answer is very simple: the lower the centre of gravity, the less the vehicle will tilt sideways when changing direction (see diagram below) and the more evenly its weight is distributed on all four wheels when accelerating and braking. If, on the other hand, the heaviest of the vehicle's components (in the case of your RC car, the engine, transmission and differential) are positioned further above the road, much greater forces are exerted on them as the load changes, and as a result, the car's roadholding is significantly destabilised.

Increasing the ground clearance (below right) shifts a car's centre of gravity upwards. When cornering, the momentum that tends to keep the car going in a straight line results in a load transfer, causing the body to lean over more than it would do if the centre of gravity was lower (below left).

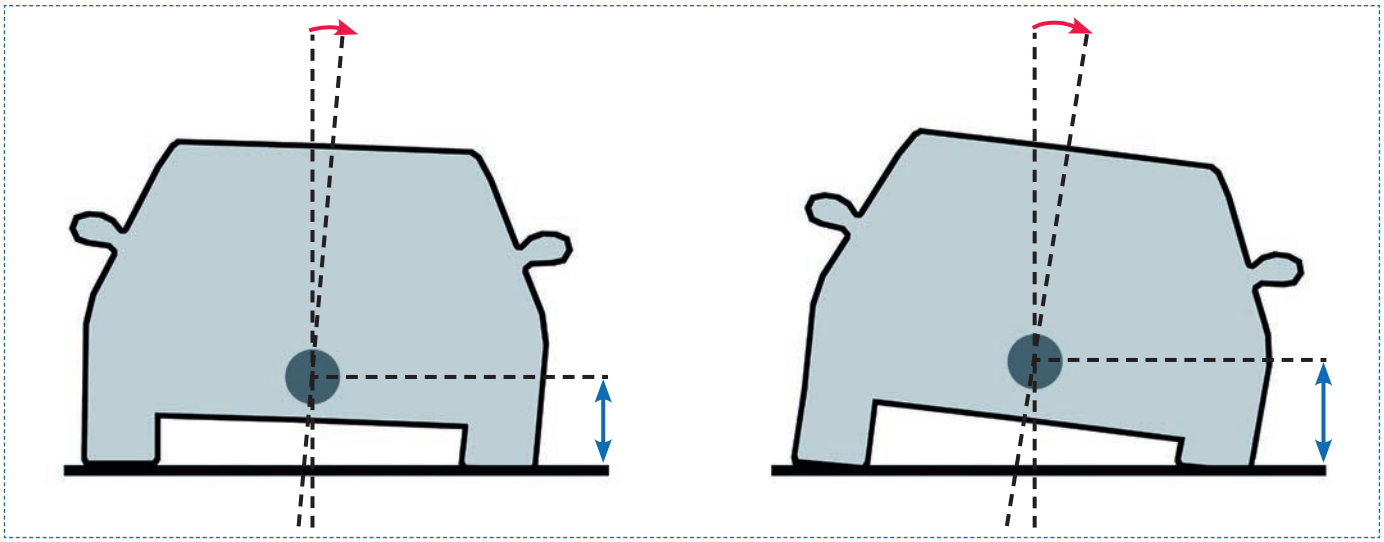

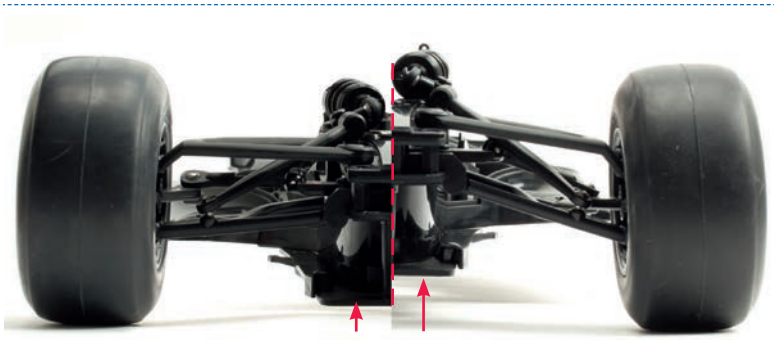

The two extremes in setting the ground clearance of your RB7 racer. In the photo on the left, the shock absorber on the left has been shortened to the minimum, without a spacer ring next to the piston rod. The shock on the right has an additional spacer ring (indicated by the red dotted line) extending the travel to a maximum. This makes it possible to increase the ground clearance on the front axle from about 5mm to over 10mm. The two red arrows in the illustration below left show the difference between the two clearances.

A low ground clearance improves roadholding. This, in turn, allows the car to corner at higher speeds and to brake harder without flying off the track or skidding. But there are limits to this minimum ground clearance – above all, the circuit itself. If the road surface is smooth and the boundary kerbs of the circuit are relatively flat, the ground clearance can be reduced. But the reality is usually very different. Faults in the road surface, stones on the track and raised kerbs all take their toll. It is therefore advisable, when racing your RC car, to make compromises in terms of ground clearance so as not to have your pleasure spoiled by the sudden loud grating noise of the chassis scraping against the track – which could lead to actual damage.

SET-UP VARIATIONS

RC pros fine-tune the ground clearance by using wheels of various diameters, or by using special lathes to remove a millimetre or two from the foam rubber of their competition tyres. In addition, the axles of professional racing models have mechanisms for adjusting the height of the chassis. But in the world of amateur model-makers, such devices would be too expensive. This is why we recommend a simpler way of raising or lowering the chassis height of your RB7 Formula 1 car. This method involves the shock absorbers.

The chassis of your RC car rests on its suspension. The front axle suspension is supported by two pushrods attached to the shocks, which are mounted longitudinally on the upper side of the chassis. On the rear axle, the shocks are located – as you will learn in future stages – directly between the chassis and the suspension. In this way, each change in the spring deflection of the shocks has an indirect or direct effect on the ground clearance.

For the minimum possible ground clearance, you can shorten the damper by screwing its ball socket further onto the piston rod. As a result of the damper's shorter overall length, the chassis will sink lower (see bottom photo, left-hand side).

If your racer needs more ground clearance between it and the circuit, you can 'stretch' the damper by screwing the ball socket further away from the piston rod and perhaps fitting a spacer ring (a very useful item of model-making paraphernalia) between the spring and the upper spring stop. The lengthened (and more strongly pre-loaded) damper will push the chassis further upwards, as shown on the right-hand side of the photo at top left.

Stage 53

LEFT REAR WHEEL AND TYRE

THE LEFT REAR TYRE SUPPLIED WITH THIS STAGE COMES WITH ITS FOAM INSERT PRE-INSTALLED, SO THAT IT IS READY TO BE FITTED TO THE WHEEL.

FRONTS AND REARS

As on the real Red Bull Racing RB7, the rear tyres of your model are wider than those on the front wheels. The tyre width difference on your model is exactly to scale.

Tools & Materials

- Knife
- Fine-grade sandpaper
- Lint-free cloth
- Superglue
- Steel ruler
- Brush
- Angled needle-nose pliers
- Scissors

1. Left rear tyre
2. Foam insert (pre-installed)
3. Stickers
4. Left rear wheel

01 For this stage of your model's assembly, you will need the left rear tyre, left rear wheel and OZ RACING stickers supplied with this stage.

02 Roughen the inner surface of the grooves around the outer side of the wheel with some rolled-up, fine-grade sandpaper to optimise the adhesion in this area.

03 When you have sanded the fluting, brush away any residue.

04 Repeat Steps 2 and 3 along the inner groove of the wheel.

05 The tyre comes complete with its foam insert and there is no need to separate the two when you fit them to the wheel. Begin by putting the tyre on your work surface with the logo side uppermost, then gently ease the wheel into it, as shown, until the tyre reaches the rim of the wheel. Be careful not to damage the lettering on the sidewall.

06 Turn the wheel around and, holding the assembly as shown, pull the tyre lip into the groove on the inside rim so that it rests fully within it.

07 Now repeat Step 06 on the other side of the wheel rim and the tyre. The tyre lip should again rest fully within the groove.

08 Pull the tyre lip back from the wheel as shown, and drip a small amount of superglue into the groove.

09 Push the tyre lip back into the groove and hold it there for a few seconds. Repeat Steps 08 and 09 at intervals of 2cm around the entire circumference of the wheel groove, as indicated by the red arrows.

10 Your wheel should now look like this, and the next job is to apply the two OZ RACING stickers.

11 Separate the two stickers using a sharp pair of scissors, taking care not to cut through the curved lettering.

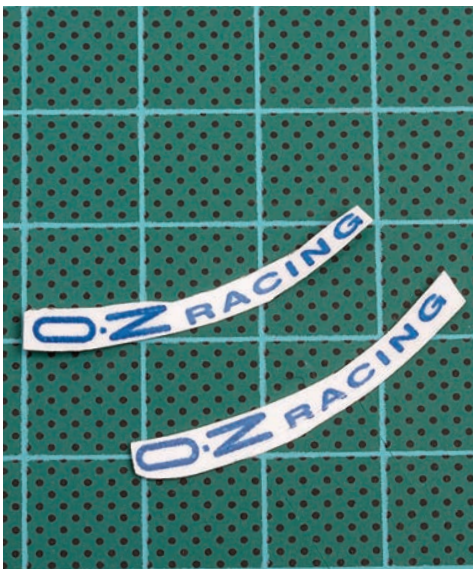

12 Using scissors or a sharp knife, trim the stickers close to the lettering, as shown above.

13 Holding the assembly as shown, use a moist cloth to wipe away any dirt, grease or residue from the inside of the wheel. Ensure that the wheel is dry before proceeding to the next step.

14 Using angled needle-nose pliers, gently remove one of the two stickers from its backing paper.

15 Carefully position the sticker on the inside of the rim, as shown, and gently but firmly press it down with a fingertip to fix it firmly in place.

16 Repeat Steps 14 and 15 to fit the other sticker to the rim, diametrically opposite the first one. The assembly of the left rear wheel is now complete.

Stage 54

SECOND REAR SHOCK ABSORBER

IN THIS SESSION, YOU WILL ASSEMBLE THE SECOND OF YOUR MODEL'S REAR SHOCK ABSORBERS. AFTER YOU'VE ASSEMBLED IT, YOU WILL BE ABLE TO FIT BOTH OF THE REAR SHOCKS ONTO THE CHASSIS AND CONNECT THEM TO THE REAR SUSPENSION.

Tools & Materials

Needle-nose pliers
Phillips screwdriver (size 2)
Shock absorber oil (supplied with Stage 4)

1. Shock absorber body
2. Shock absorber spring
3. Shock absorber shaft
4. E-rings (E2.5) x 2
5. Spring holder (lower)
6. Spring spacer
7. Spring holder (upper)
8. Shock absorber top
9. Diaphragm
10. Shock piston
11. Ball end

01 Using needle-nose pliers, clip one of the E-rings into the first groove on the unthreaded end of the shock absorber shaft.

02 Push the shock piston onto the shaft (see red arrow) until it rests up against the E-ring.

03 Clip the second E-ring into the other groove. The shock piston is now sandwiched between the two rings.

04 Remove the pre-fitted end cap from the shock absorber body so that the threaded section is visible. Then, holding the body as shown, push the shaft into the case until it protrudes through the hole at the other end (see Step 05).

05 Cover the threaded section of the shaft with a cloth to protect it from scratches, then use needle-nose pliers to pull the shaft as far out of the case as it will go. Hold the shaft in place, then screw the ball end on a little way.

06 Now screw the ball end further onto the shaft, until the exposed portion of the shaft measures exactly 8mm, as shown above.

07 Holding the cap as shown, push the shock absorber top into the hole in it (indicated by the red arrow) as far as it will go.

08 Holding the shock absorber body upright and with the shock shaft fully extended, carefully begin to pour in the shock absorber oil you received with Stage 4 – there should be enough left over from the work you did on the front shocks.

09 When the oil level nears the top of the body, move the shaft slowly up and down so that the oil spreads throughout the assembly and displaces any air below the piston. Repeat this process until no more bubbles appear.

10 When any air bubbles are gone, carefully fill the case to the brim with shock absorber oil. Make sure that no more bubbles are formed when you add the oil, and that no oil overflows onto the outside of the body.

11 Hold the diaphragm with needle-nose pliers so that the domed side is facing downwards. Slowly place it on top of the body, taking care to avoid creating air pockets in the oil.

12 Wipe away any excess oil using a cloth, then take the shock absorber cap and top assembly and screw it onto the threaded section of the body. Turn it in the direction of the arrow until tight.

13 Holding the shock absorber body as shown, slide the spring spacer over the shaft until it rests against the ridge at the base.

14 Next, use needle-nose pliers to fit the upper spring holder over the body and slide it down so that it rests on top of the spring spacer.

15 Place the spring over the shaft at the end of the body so that it rests on the upper spring holder.

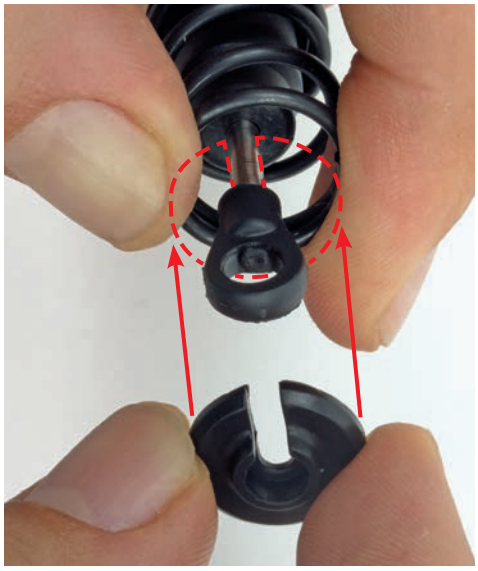

16 Hold the body assembly in one hand and pull back the spring, as shown. Place the lower spring holder in the gap on the shaft between the spring and ball end. Gently release the spring so that it comes to rest as shown in Step 17.

17 The spring should fit comfortably within the ridge on the underside of the lower spring holder, as shown.

18 Place your newly completed shock absorber alongside the one that you assembled in Stage 48. The two need to be of equal length, so that your model's ground clearance is the same on both sides.

19 If the length of one of the shocks needs to be adjusted, hold the shaft with your pliers (put a piece of cloth around the shaft to protect it), then adjust the ball end to achieve the desired length.

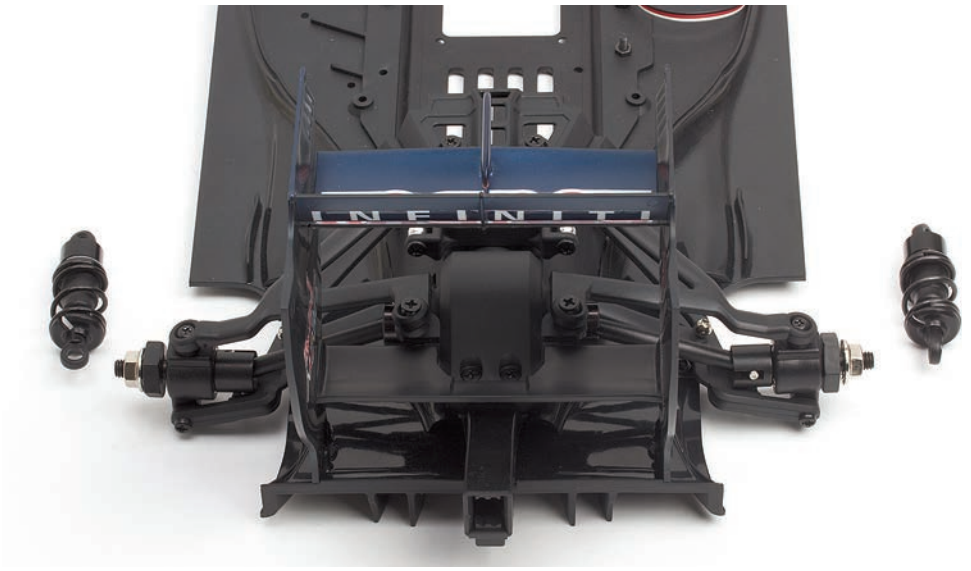

20 When both shocks are set to the same length, you can fit them onto your model. Place the chassis on your work surface as shown, with the rear of the car towards you and one shock within easy reach on each side of it.

21 The upper attachment point for both shocks is the rear shock mount that you assembled and fitted in Stage 42. Because access to the shock mount is limited by the rear wing, it's best to remove the mount from the chassis before you begin attaching the shocks to it.

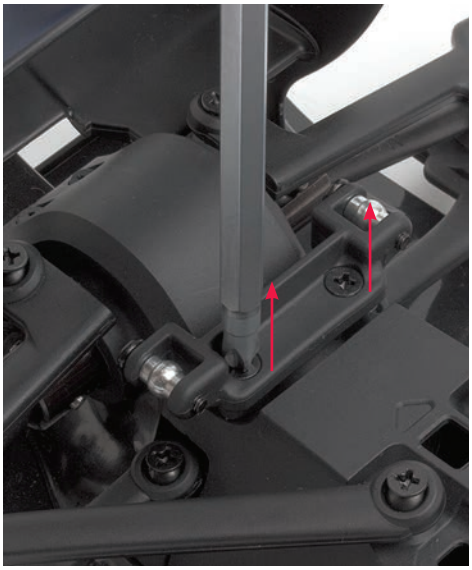

22 To remove the rear shock mount, use a Phillips screwdriver to undo the two fixing screws and then lift the mount vertically (see arrows). Keep the screws in a safe place until you replace the mount in Step 31.

23 Put the shock mount on your work surface and, holding it in place with a fingertip, as shown, undo the screw retaining one of the ball shafts. Keep the screw safely until you replace it in Step 27.

24 Fit the ball shaft loosely into the hole in the top of one of the shock absorbers.

25 Using pliers, carefully squeeze the ball shaft into the hole. Sit the upper jaw of the pliers on the end of the ball shaft and the other jaw just to the side of the hole, as shown, so that the shaft can protrude from it when it snaps into place. For an alternative method, see Step 26.

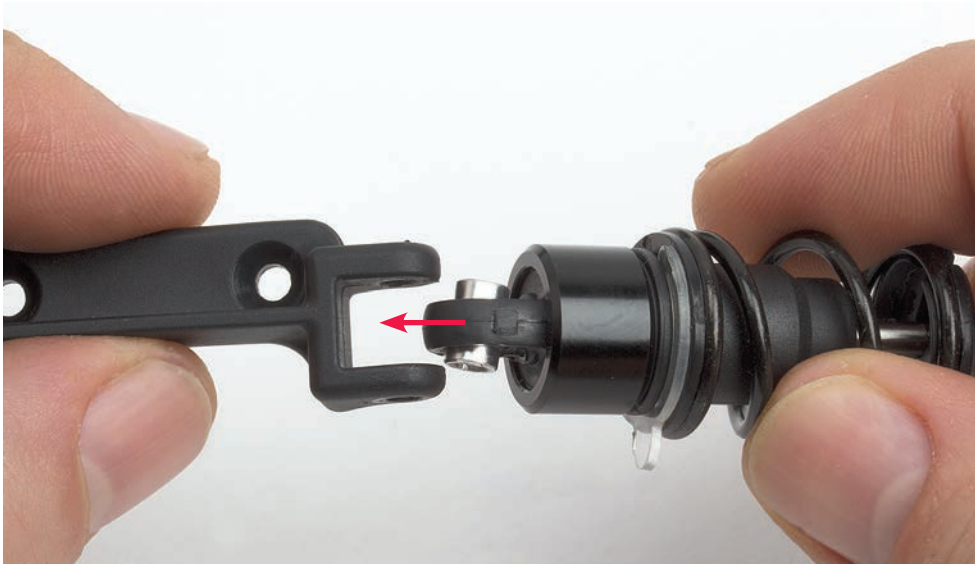

26 If fitting the ball shaft with pliers has been unsuccessful, hold the shock firmly with the tip of the shock top on the edge of your work surface, leaving the hole unobstructed. Then you will be able to push the ball shaft down into the hole until it clicks into place. When you have fitted the ball shaft, place it into one of the forked ends of the shock mount, as indicated by the red arrow.

27 Position the ball shaft so that the hole though its centre lines up with the holes in the end of the shock mount. Then replace the screw that you removed in Step 23, to attach the shock absorber to the shock mount.

28 Repeat Steps 23 to 27 to fit the other shock absorber to the other end of the shock mount.

29 When you have attached both shocks to the mount, you can fit the assembly to your model's chassis. Hold the assembly as shown, with the flat leading edge of the mount facing towards the front of the car. Then lower it gently into place, with the shocks passing through the centres of the upper wishbones, and guide the free ends of the shocks towards the ball-headed screws on the lower wishbones (see red arrows).

30 Position your shock mount on the top of the rear bulkhead, as shown in the photo, making sure that the holes on the shock mount line up with those on the bulkhead.

31 Fix the shock mount in place with the two countersunk screws that you removed in Step 22. Both screws should sit flush to the shock mount baseplate, but be careful not to overtighten them.

32 Turn the ball end of the right shock absorber so that it sits on top of the ball-headed screw on the right lower wishbone, as shown (see red arrow).

33 Supporting the lower wishbone from below, use your thumb to press down on the ball end of the shock absorber (see red arrow) until it clicks fully into place. Test that the shock absorber is correctly fitted and functioning by raising the wishbones against the resistance of its spring, then slowly letting them drop back down.

34 Repeat Steps 32 and 33 for the left rear shock absorber. Again, the ball end should first sit on top of the ball-headed screw.

35 This session is now complete, and your assembly should look like this. If the lengths of the two shock absorbers have been adjusted correctly, the left and right rear wishbones will be inclined at the same angle.

Stage 55

ASSEMBLING THE MAIN SHAFT

IN THIS STAGE, YOU FIT YOUR RB7 RACER'S MAIN SHAFT WITH ITS BALL BEARING. THE MAIN SHAFT IS A KEY COMPONENT OF YOUR MODEL'S TRANSMISSION SYSTEM, AND NEXT TIME YOU WILL ASSEMBLE AND FIT THE SPUR GEAR THAT LINKS THE MAIN SHAFT TO THE ENGINE.

Tools & Materials

Angled needle-nose pliers

1. Main shaft
2. E-ring
3. Ball bearing

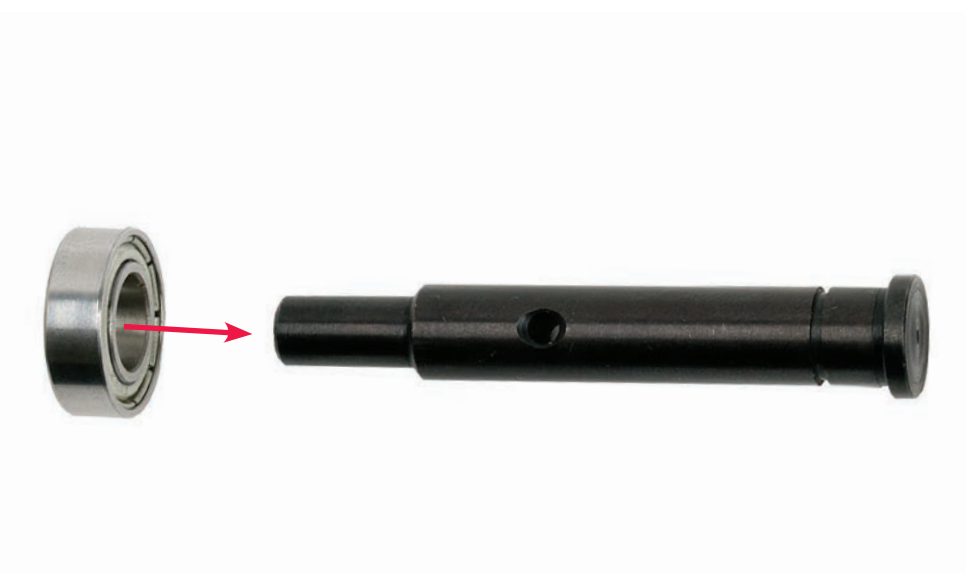

01 The main shaft is divided into three parts. One end, on the right in the photograph above, is flanged and has a groove to take an E-ring, and this is where the bearing will be seated when you fit it to the shaft. The longer central section of the shaft has a hole drilled through it to take the drive pin that will lock the spur gear to it when you fit it in the next stage. The smaller-diameter section on the left, which is the rear end of the shaft, will be fitted into another bearing in a later stage. Begin this assembly session by putting the ball bearing onto the shaft, as indicated by the red arrow.

02 Slide the ball bearing all the way along the shaft to butt up against the flange on the far end, leaving the groove in the shaft exposed (dotted red line).

03 Place the ends of the E-ring into the groove in the shaft.

04 Using pliers as shown, gently push the E-ring fully into place in the groove so that it locks onto the shaft.

05 The finished main shaft and ball bearing assembly. The bearing is held securely in place on the shaft by the E-ring, but must be able to rotate freely.

Stage 56

GEARBOX SPUR GEAR

THE SPUR GEAR TRANSMITS THE ROTATION OF THE ENGINE PINION TO THE MAIN SHAFT OF THE DRIVETRAIN. THIS IS DONE VIA A PIN THAT LOCKS THE GEAR TO THE SHAFT.

Tools & Materials

Phillips screwdriver (size 2)
Tape (for temporarily holding the gear in place on the main shaft)

1. Pin 2.5 x 16mm
2. Countersunk screws 3 x 8mm (self-tapping)
3. Spur gear (46 teeth)
4. Spur gear holder

01 Position the spur gear as shown, with the side with the circular ridge facing upwards.

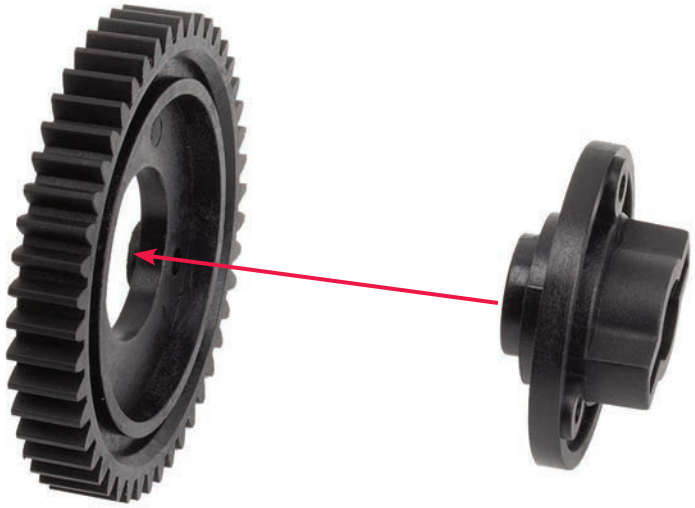

02 Take the spur gear holder and insert it into the centre of the spur gear, as indicated by the red arrow. If the parts don't fit together easily, check for any burrs around the central hole of the gear and the part of the holder that fits into it. Remove any burrs you find, and then insert the holder into the gear.

03 Press the holder fully into place in the centre of the spur gear. The outer edge of the holder should be flush with the ridge of the gear.

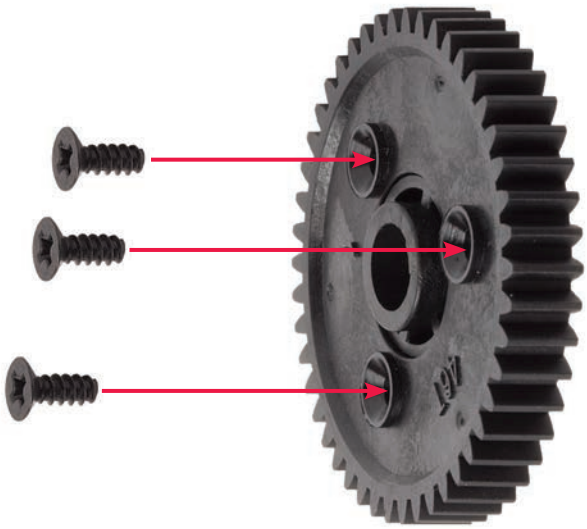

04 The three screws fit into the three countersunk holes on the back of the spur gear. These will secure the holder to the gear.

05 Before inserting the screws, check that the holes in the gear and the holder are aligned, as shown above. If not, rotate the holder in the gear until they are.

06 Place a screw into one of the holes in the back of the gear, and begin screwing it in.

07 Keep turning the screw until the head is flush with the edge of the countersunk hole. If the screw protrudes above the edge of the hole, it could prevent the gear rotating properly.

08 Repeat Steps 06 and 07 with the remaining two screws. Try to avoid over-tightening them.

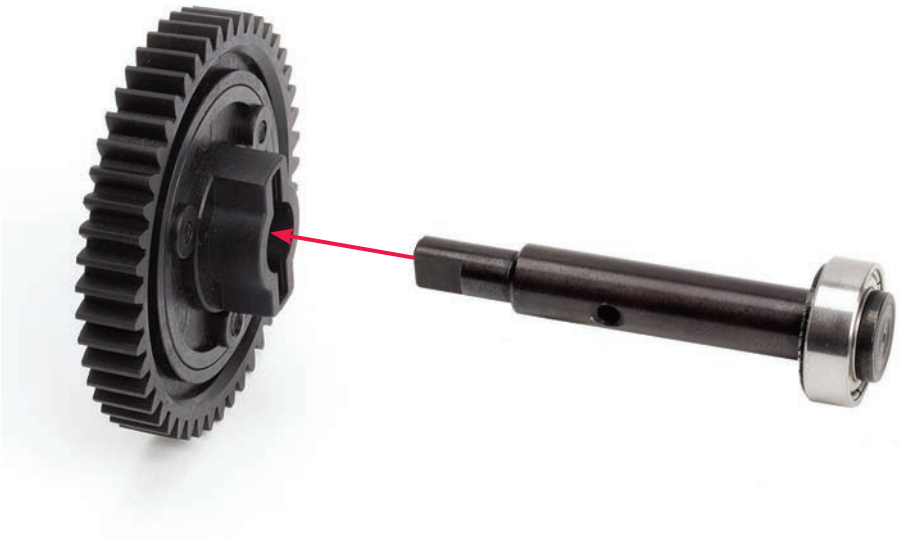

09 Take the main shaft that you assembled in Stage 55 and insert it into the hole in the spur gear holder, as shown by the arrow.

10 When inserting the shaft into the holder, stop before the hole in the shaft enters it.

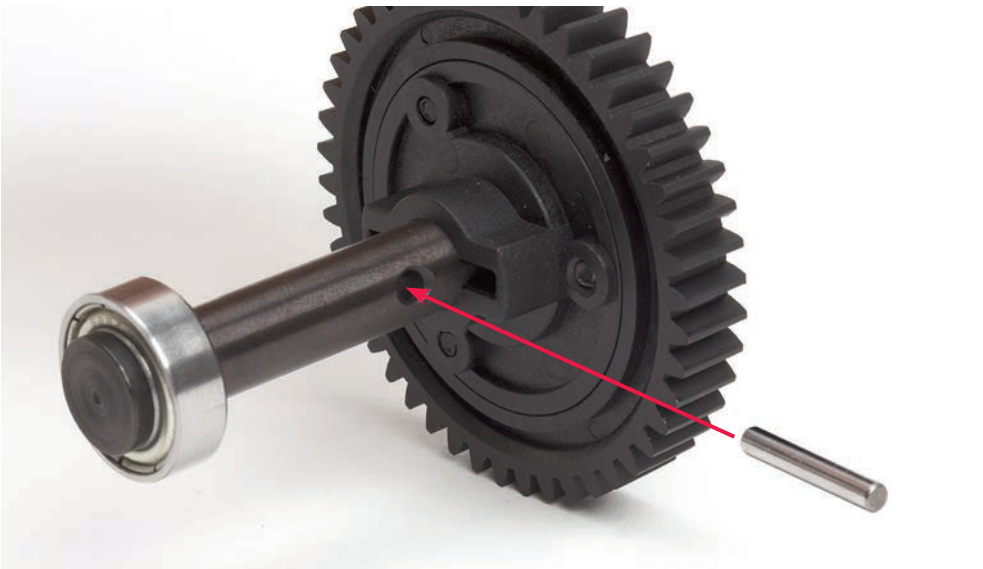

11 Holding the assembly in position as shown, insert the pin into the hole in the shaft. Turn the shaft so that the pin is aligned with the recesses in the holder.

12 Position the pin so that it protrudes equally from both sides of the shaft. Check that the pin is still aligned with the recesses in the holder.

13 Push the shaft further into the holder so the pin fits into the recesses, as shown.

14 To prevent the assembly coming apart, tape the end of the shaft to the back of the gear. This will stop the shaft moving and the pin falling out.

DeAGOSTINI
MODEL SPACE™

Red Bull
Racing
FORMULA ONE TEAM