DeAGOSTINI MODEL SPACE™

Red Bull Racing
FORMULA ONE TEAM

RB7

RADIO CONTROLLED • BUILD IT YOURSELF • NITRO ENGINE

Pack 10

Stages 37-40

Contents

Visit our website www.model-space.com

Editorial and design by Continuo Creative, 39-41 North Road, London N7 9DP

UNDERSTANDING THE DIFFERENTIAL

NOW THAT THE REAR AXLE OF YOUR RB7 RACER IS TAKING SHAPE, THE TIME HAS COME TO HAVE A CLOSER LOOK AT THE OPERATION OF THE DIFFERENTIAL, WHICH YOU HAVE BEEN PUTTING TOGETHER SINCE THE PREVIOUS ASSEMBLY GUIDE.

The purpose of the differential is to transmit the power of the engine to the wheels and allow one wheel to spin faster than the other as the car corners. The differential you are putting together is a complicated assembly of precision-made gears, and with the casing closed, it is impossible to see how the individual components work together as the car moves, so let's take a look at the principles involved.

THE REAR AXLE DRIVE

The rear drivetrain of your RB7 racer starts with the main spur gear, which is turned by the engine. A short driveshaft transmits the rotation to the disc brake, after which the linkage on the driveshaft mount takes the power through a second, longer driveshaft (as shown on the right) that transmits it up to the car's rear bulkhead.

Just before the bulkhead, a cup joint connects the driveshaft to the drive bevel gear (a part to be provided with this pack). The pinion of the bevel gear then engages with a larger ring gear or 'crown wheel', turning the drive through a right angle.

The crown wheel itself is connected to the case of the differential assembly and turns with it, as shown in the photograph at top left on page 167, where it is identified by the letter 'c'. Inside the case are sets of gears connected to two driveshafts (halfshafts). How much of the rotation of the differential is transmitted to each of the two halfshafts (and thus to the wheels) depends on whether the car is driving in a straight line or in a curve.

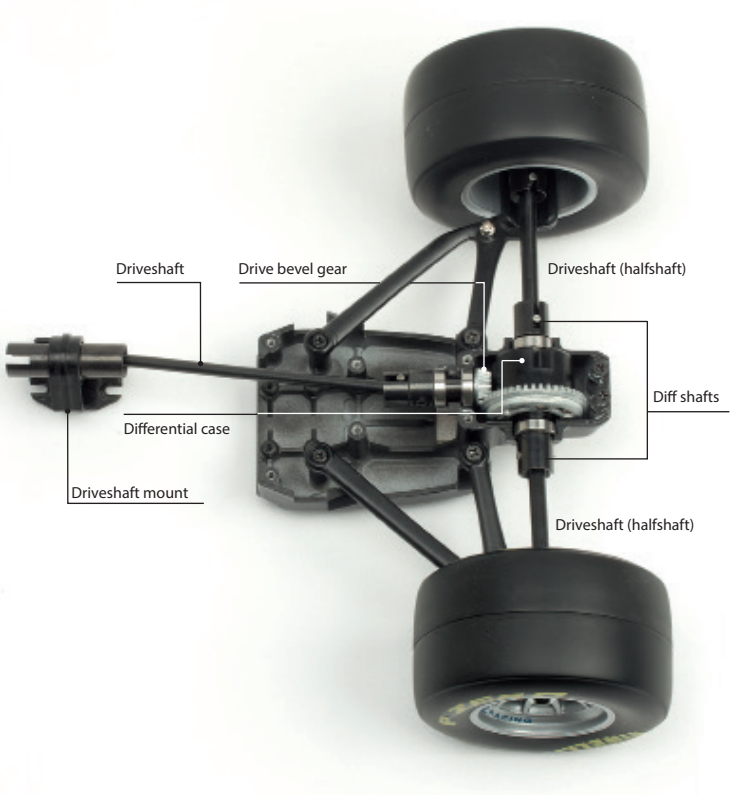

This photograph shows the key components of your model's rear axle drivetrain. For clarity, the upper rear bulkhead and casing have been removed to expose the differential and its gears.

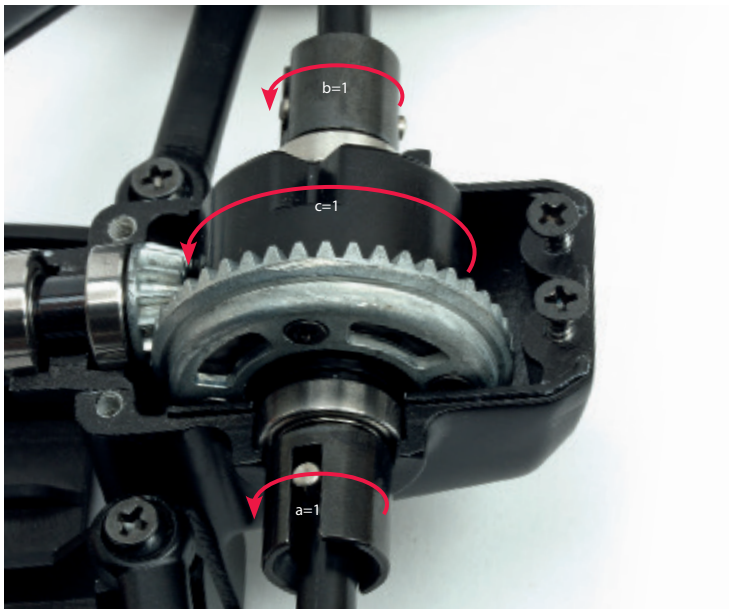

When driving in a straight line, the rolling friction on each wheel is the same, and the two halfshafts (a and b) behave as if they are rigidly connected to each other. They rotate at the same speed as the differential case (c) and the crown wheel connected to it. If you turn it as shown below, you can feel the operation of the differential when driving in a straight line.

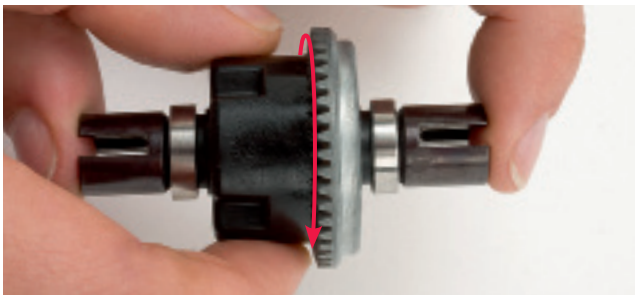

DRIVING IN A STRAIGHT LINE

The simplest scenario occurs when the vehicle is driving in a straight line. In this case, the two wheels cover the same distance and rotate at the same speed. The two halfshafts of the rear axle, which lead from the differential to the wheels, behave as if they were rigidly attached to each other and rotate at the same speed as the differential case (as shown above).

As soon as you have finished assembling the differential (in Stage 39), you will be able to simulate straight-line driving by holding the differential as shown above, with your thumb and forefinger pressing lightly on the two cup joints while you rotate the differential case with the other hand. You will see that the two driveshafts rotate together, regardless of the pressure you apply to them. This means that the two wheels will be driven equally strongly.

When the car is in action, the force that you are simulating with your fingers is provided by rolling friction. This depends on the road conditions and on the weight of the vehicle, and is a decisive factor in the way that the differential distributes the drive. The differential is not capable of 'detecting' whether the car is driving in a straight line or in a curve – it simply reacts to the forces that impact on the left and right driven wheels. Normally, when driving in a straight line on a smooth road, the rolling friction is equally high on both wheels, so each one receives the same power.

DRIVING IN A CURVE

When the car is cornering, the two rear wheels move along curves of different radiuses (as shown at the bottom of page 168), and the outer wheel covers a longer distance than the inner one. In addition, the rolling friction on the inside wheel is greater than that on the outside wheel, because the weight resting on it moves over a shorter distance. This stops it from turning as freely as the outer wheel, which is taking the longer path around the corner.

It is now that the compensating function of the differential comes into play. To simulate this happening, hold the differential assembly between your thumb and forefinger as shown at the top of page 168. This time, hold just one cup joint (a) firmly while rotating the differential case with your other hand. You will notice that the more you slow down the side you are holding, the faster the free side of the drive (b) will turn in relation to the differential case.

When driving around a curve, one wheel and its halfshaft (a) is forced to slow down while the other one (b) rotates faster. In the extreme situation that halfshaft (a) locks, halfshaft (b) will turn twice as fast as the differential assembly (c) – which has the casing omitted here to show the gears. If you turn the differential as shown below, holding (a) still, you can see this happening.

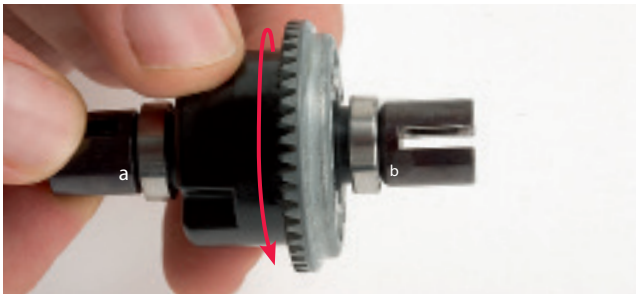

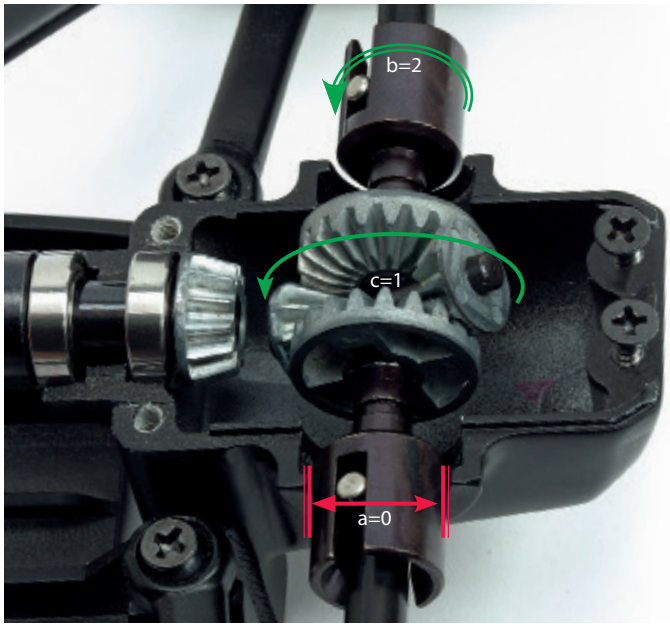

COMPENSATING MOVEMENT

If you stop one shaft completely (shown in red in the picture top right as 'a=0'), then the opposite shaft will complete exactly two rotations ('b=2') for each rotation of the differential. This is the maximum drive ratio, and is determined by the internal gearing of the differential, which contains four bevel gears that mesh together. These are visible in the photograph top right, which has the differential case removed. The two larger bevel gears have twice as many teeth (20) as the smaller bevel gears, which each have 10 teeth.

It is this ratio that determines that the outer wheel of your RB7 model can turn up to twice as fast as the crown wheel when cornering hard. This 2:1 ratio is perfectly matched to the car's performance and the demands of racing. It enables the car to follow a very tight curve with an inside radius that is the same width as the car's track. In this

When the vehicle is driving in a straight line, the left and right rear wheels cover the same distance, so they rotate at the same speed. The differential distributes the drive force equally.

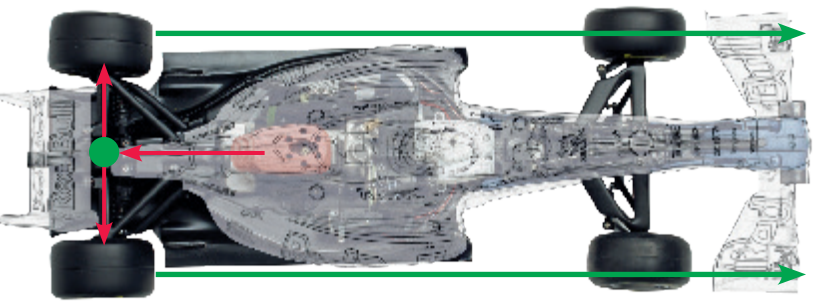

When cornering, the inner wheel moves through a tighter radius than the outer wheel. As it covers a shorter distance (red arrow) than the outer wheel (green arrow), it cannot rotate as fast, and the friction on it is greater. The differential distributes the drive proportionally, delivering more drive to the wheel that is rotating more easily and travelling further.

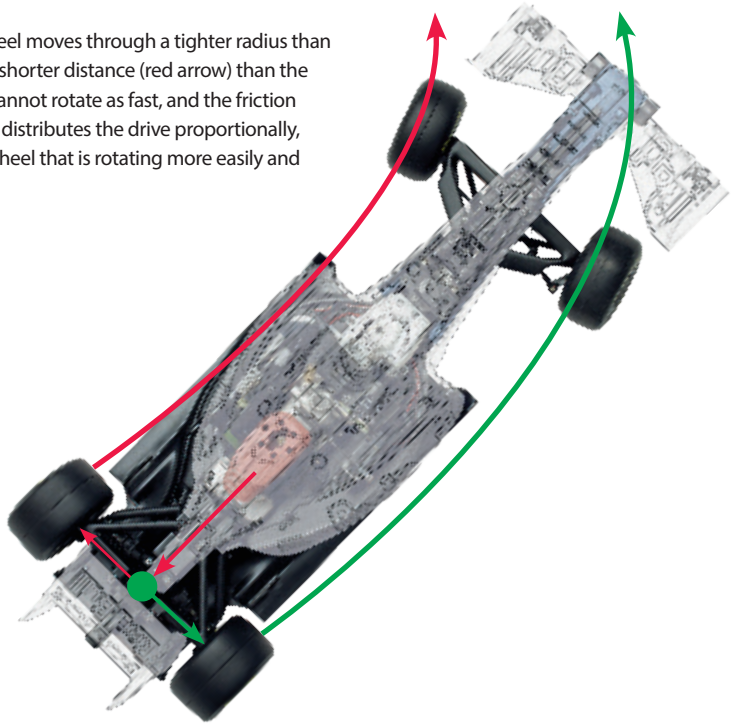

The components of the differential: the drive gear pinion (a) rotates the differential case (cut away and outlined in blue) through the ring gear/crown wheel (b). The bevel shaft inside the differential case, indicated by a dotted red line, rotates at the same speed as the case, while the two small bevel gears on it (c) distribute the rotation proportionally to the larger bevel gears (d).

extreme situation, the outer wheel will have to cover twice as much distance as the inner wheel does. In this case, the differential automatically drives the outer wheel twice as fast as the inner wheel.

FORCE DISTRIBUTION

The way that the differential 'knows' whether the drive distribution is correct for any radius of curve is that it reacts to feedback from the friction acting on the wheels. On the tighter radius, the inner wheel experiences twice as much resistance to running around the circular path as the outer wheel; it absorbs two-thirds of the rolling friction while the outer wheel only absorbs one-third. The differential 'detects' the different forces exerted on the wheels and distributes the drive in inverse proportion to the rolling friction (1/3 inside, 2/3 outside). This means that while the differential case rotates three times, the driveshaft of the inner wheel rotates twice, and that of the outer wheel rotates four times. In this way, the wheel on the outside of the curve covers twice the distance travelled by its counterpart on the inside.

In short, it can be said that the differential always applies more drive to the wheel that turns more easily, and also that the faster the wheel turns, the less its rolling friction compared to that of the other wheel.

WHEELSPIN

This effect is important not only on curves. For instance, if the vehicle veers off the track so that one rear wheel spins on wet grass, the differential will come into action. As it will apply more drive to the wheel that spins more easily, the wheel that is still in contact with the road surface will receive increasingly less engine power. If the wheel starts to spin on the wet grass, it will eventually receive all the power and the vehicle will no longer move forward. The driver will need to put less pressure on the throttle, and drive very carefully until the wheel manages to find traction with which to drive out of the situation.

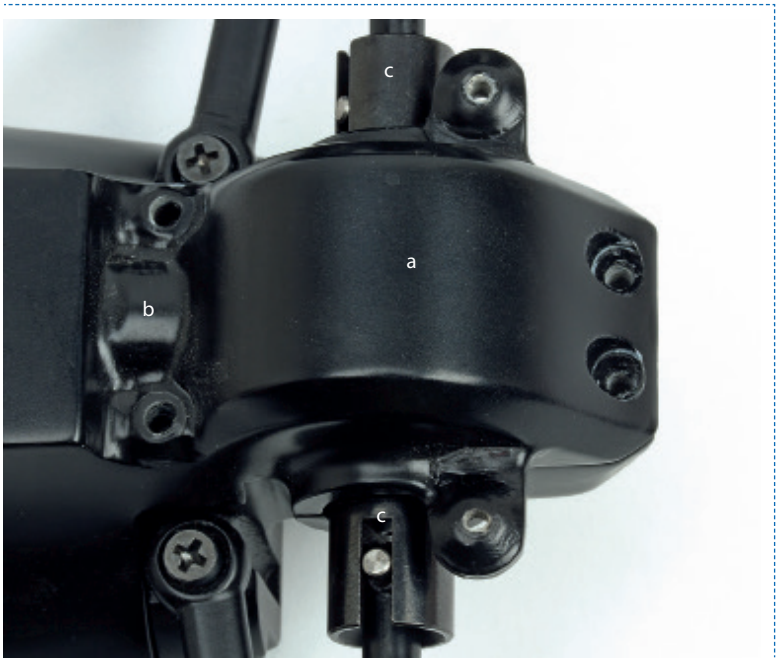

The upper rear bulkhead (a) acts as a mounting for the differential. It locates the drive bevel (b) and the differential couplings (c) in position. At the same time, it acts as a protective housing for the crown wheel and pinion.

Stage 37

FIRST PARTS OF THE DIFFERENTIAL

THE DIFFERENTIAL IS A CENTRAL PART OF YOUR RB7'S DRIVETRAIN. IN THIS ASSEMBLY, YOU WILL BEGIN TO PUT TOGETHER THE FIRST COMPONENTS THAT MAKE UP THE LEFT-HAND SIDE OF IT.

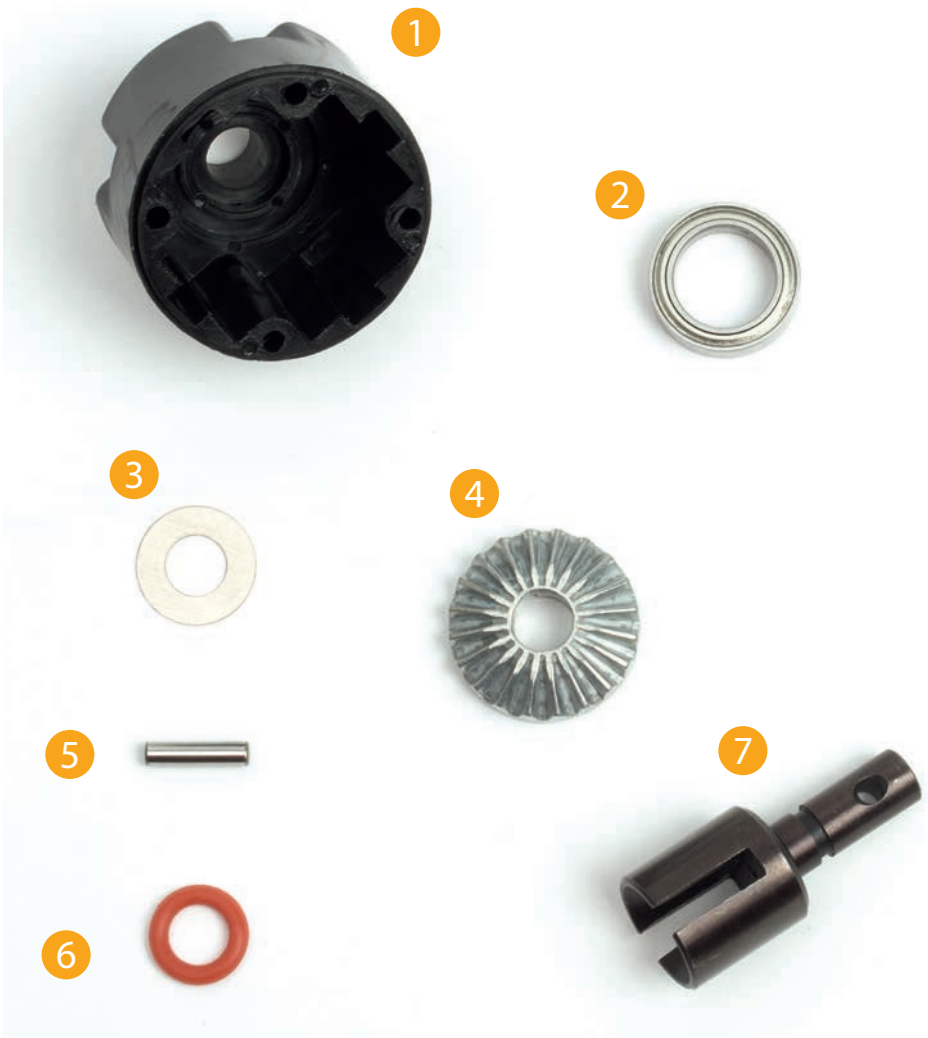

Tools & Materials

Angled needle-nose pliers (smooth)

1. Differential case
2. Ball bearing (10 x 15 x 4mm)
3. Shim (6 x 12mm)
4. Differential bevel (20T)
5. Pin (2.5 x 10.3mm)
6. O-ring (6mm)
7. Differential shaft

01 Place the differential case on your work surface, and position the ball bearing on top, as shown.

02 Press the ball bearing onto the differential case until its upper edge sits level with the top of the case.

03 Your assembly should look like this. Press the bearing down a little further if it's not level.

04 Insert the smaller end of the differential shaft into the hole at the top of the differential case (see arrow).

05 Make sure the differential shaft is inserted as far as it will go. Only a minimal gap should remain between the shaft and the ball bearing (see arrow).

06 Turn the case over and look inside. The shaft must be far enough inside that the hole drilled through it near its end (see arrow) is fully visible.

07 Next, place the 6mm O-ring onto the shaft.

08 Use pliers to ease the O-ring onto the shaft, but be very careful not to apply too much pressure as this may damage the ring.

09 Open the pliers slightly, as shown, and gently press the O-ring down until it rests at the base of the shaft.

10 Compare your assembly to the photo. The O-ring must sit in the groove on the inside of the differential case, as shown by the arrows.

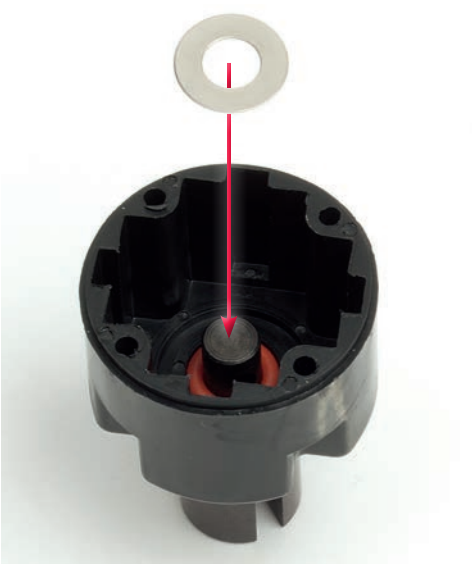

11 Now slide the shim onto the shaft.

12 As with the O-ring in Steps 8 and 9, it may help to use pliers to fit the shim precisely.

13 Again compare your assembly with the photo. If the shim is fitted correctly, it should sit level with the inside of the differential case.

14 The 2.5 x 10.3mm pin will be placed through the hole in the differential shaft, to hold the parts assembled in Stages 04 to 13 in place.

15 Align the pin with the hole in the differential shaft (see arrow). Turn the other end of the differential shaft to align the hole with the pin.

16 Use pliers to grip the pin and push it into the hole.

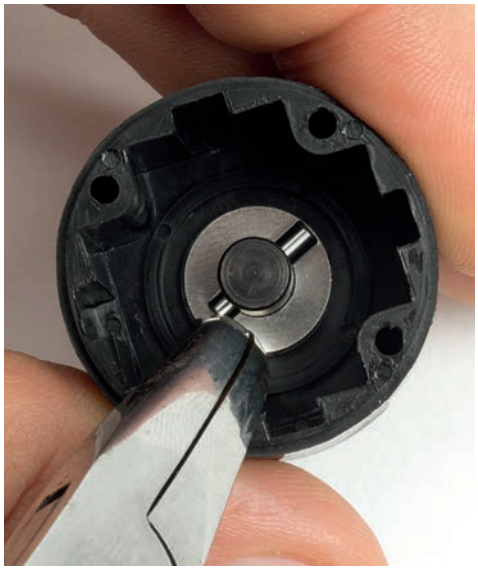

17 The pin should be set so that equal lengths protrude on either side. Adjust it using pliers, if necessary.

18 At the end of this session, your differential case should look like this. Store it away safely until it is needed, remembering to keep any unused parts, as these will be required at a later stage.

Stage 38

BUILDING UP THE DIFFERENTIAL

IN THIS SESSION, YOU WILL CONTINUE WORKING ON THE DIFFERENTIAL BY ADDING THE INTERNAL BEVELS AND PREPARING FOR THE FINAL PHASE OF ASSEMBLY IN THE NEXT STAGE.

Tools & Materials

- Angled needle-nose pliers (smooth)
- Wooden stick or toothpick

1. Universal grease
2. Differential bevels (10T) x 2
3. Bevel shaft
4. Differential case cap

01 Place the assembly you began with the previous stage onto your work surface, as shown. The 20T differential bevel, which was supplied in the previous stage, will be placed into the case (see arrow).

02 Make a note of the cutouts in the back of the bevel, arrowed. These will sit on the 2.5 x 10.3mm metal pin you fitted through the differential shaft inside the case in the last assembly session.

03 Use pliers to slide the bevel carefully onto the differential shaft. Push it all the way down, remembering to line up the cutouts with the metal pin at the base of the case. Rotate it slightly, if necessary, to locate it on the pin.

04 The bevel should sit flush with the top of the differential shaft, as shown. Set this part of the assembly to one side.

05 Next, fetch one of the 10T differential bevels and the bevel shaft supplied with this stage. The two parts will fit together, as shown by the arrow.

06 Insert the bevel shaft into the bevel so that it resembles the photograph, and carefully lay it on its side, as shown in Step 7.

07 Making sure the bevel fitted in the previous step does not slide off, place the second 10T bevel onto the other end of the shaft so that it faces the first, as shown.

08 Slide both bevels towards each other so that they meet in the middle of the shaft.

09 Holding the two bevels in place, lower the shaft horizontally into the differential case, sliding the ends of the shaft down the grooves on the inside of the case.

10 Once in place, slide the two bevels apart until they each rest on the edge of the case, as shown in the photo for Step 11.

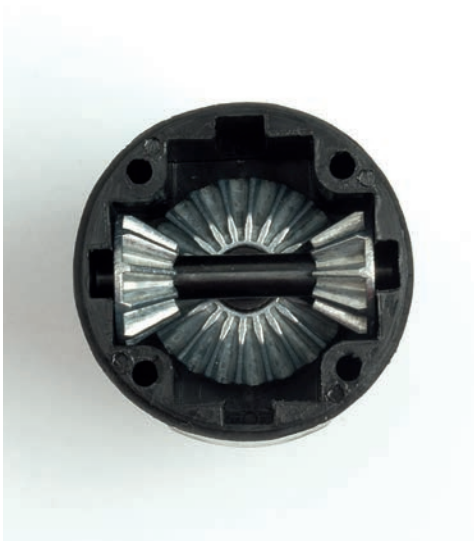

11 Compare your assembly to the photo. The bevels should be positioned as shown.

12 The next step is to grease the differential. Cut a small hole in a corner of the pack of universal grease supplied with this stage, and begin to apply grease to the inside of the differential case. See the next photo to gauge the correct amount to apply.

13 Use a wooden stick or toothpick to spread the grease around within the differential case.

14 Hold the end of the differential shaft with one hand, and turn the case back and forth a few times with your other hand to spread the grease evenly.

15 Compare your assembly with the photo to check that the grease is spread sufficiently. Then wipe the upper edge of the case with a rag or cloth, ready to fit the differential case cap, pictured.

16 There are four ridges moulded on the underside of the cap, marked by the four red arrows. Place the lid on top of the case so that these fit snugly into the corresponding slots on the inside of the case, marked by the green arrows.

17 Your assembly should look like this. Store safely away until the next stage, when you will complete your RB7's first differential. Also remember to keep any unused parts and the remainder of the grease for use in further stages.

Stage 39

COMPLETING THE DIFFERENTIAL

IN THIS SESSION, YOU WILL COMPLETE THE ASSEMBLY OF THE DIFFERENTIAL, READY TO BE MOUNTED ONTO THE LOWER REAR BULKHEAD OF YOUR RB7 RACER.

Tools & Materials

Phillips screwdriver

1. Differential ring gear (43T)
2. Differential shaft
3. 4 countersunk screws (2.6 x 12mm)
4. Differential bevel (20T)
5. O-ring (6mm)
6. Shim (6 x 12mm)
7. Pin (2.5 x 10.3mm)
8. Ball bearing (10 x 15 x 4mm)

01 Position the differential on your work surface as shown, and remove the cap carefully by hand.

02 Slide the ball bearing onto the cap as far as it will go, following the red arrow in the photograph.

03 Next, hold the cap and ball bearing upside down and slide onto the differential shaft, until the upper tip of the shaft is fully visible (see Step 04).

04 Now slide the O-ring over the exposed section of the shaft and push down as far as it will go.

05 Check with the photo to ensure the O-ring is correctly placed: it should sit in the groove on the underside of the cap (arrowed).

06 Slide the shim down the shaft all the way until it covers the O-ring.

07 Make sure that the shim is set low enough for the hole drilled across the differential shaft (see arrow) to be fully visible.

08 Insert the 2.5 x 10.3mm pin through the hole.

09 When set correctly, equal lengths of the pin should protrude on each side, as shown.

10 Now slide the 20T bevel onto the differential shaft, making sure to line up the grooves on the back of the bevel (arrowed) with the protruding ends of the pin inserted in Step 08. Rotating the gear will help you to locate it on the pin.

11 Apply an even layer of the grease you kept from Stage 38 onto the top of the bevel.

12 Connect the assembly to the rest of the differential by lining up the ridges on the underside of the cap with the slots on the case (see arrows). Make sure they sit securely in place. Rotating either part will help you to align these.

13 Check that the differential cap fitted in the previous step is sitting level on the case, then place the 43T differential ring gear on top of the assembly, following the red arrows.

14 Turn the gear until the round holes in it line up with those of the differential cap (circled).

15 Insert the four 2.6 x 12mm screws into the holes shown in the previous step, to fasten the gear to the differential. To start with, screw all four in as far as you can by hand.

16 Tighten each screw with a screwdriver, making sure the countersunk heads end up sitting flush with the surface of the gear.

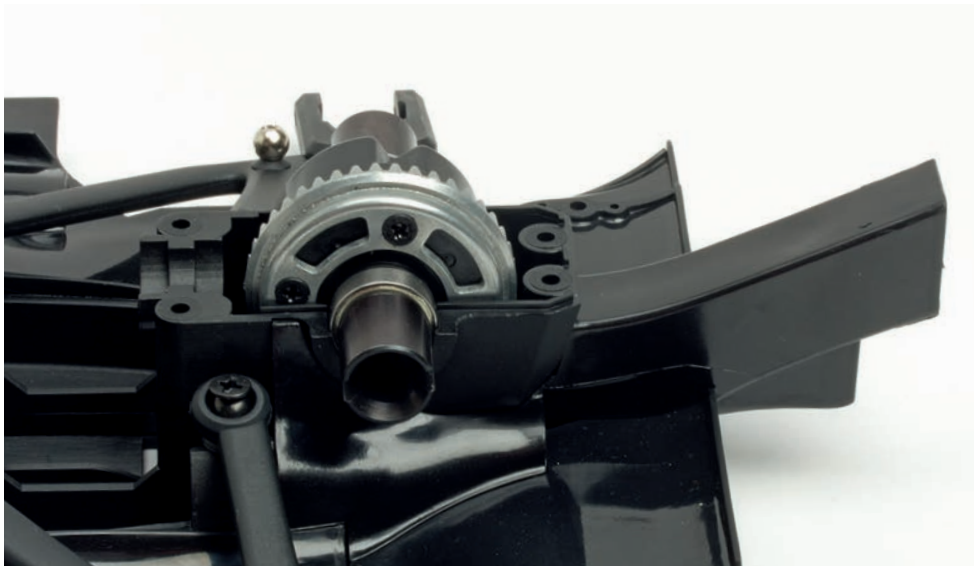

17 This completes the assembly of your RB7's differential. To mount it, place the differential, with the gear facing to the left, onto the lower rear bulkhead, as shown in the photo. Then store your model safely to prevent damage to the mounted parts.

Stage 40

INSTALLING THE DRIVE BEVEL

THE DRIVE BEVEL GEAR JOINS THE DRIVESHAFT TO THE DIFFERENTIAL GEAR, CONNECTING THE DIFFERENTIAL TO THE MOTOR. IN THIS SESSION, YOU WILL ASSEMBLE AND MOUNT THE DRIVE BEVEL GEAR AND SHAFT ONTO YOUR MODEL'S REAR BULKHEAD.

1. Drive bevel gear (13T) with drive bevel shaft (assembled)
2. 2 ball bearings (8 x 14 x 4mm)

01 Slide one of the ball bearings over the end of the drive bevel shaft, as indicated by the red arrow. Push the bearing down until it rests against the bevel gear.

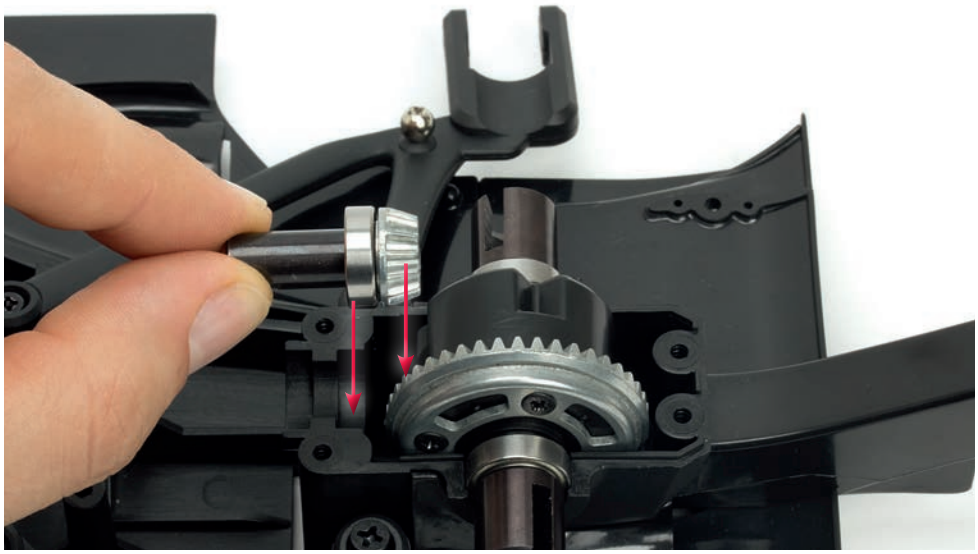

02 Position your model facing left, and set the drive bevel gear and ball bearing assembly into the space on the bulkhead, as shown. The bearing should sit in the groove at the front of the differential, so that the teeth of both gears interlock (see arrows).

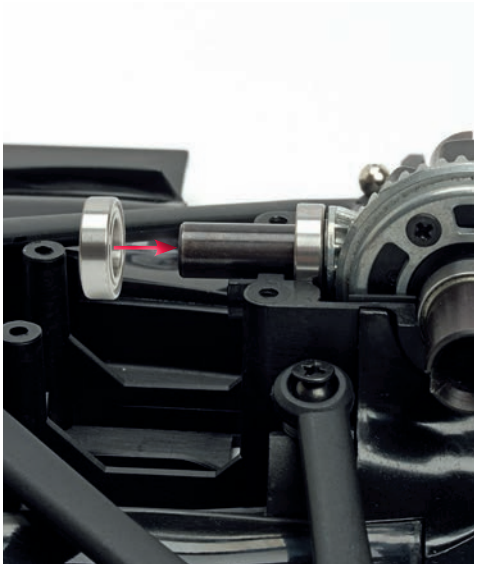

03 Check with the photo to make sure the assembly is placed correctly, then slide the other ball bearing onto the drive bevel shaft, as you did in Step 01. Push the bearing along as far as it will go without the shaft moving.

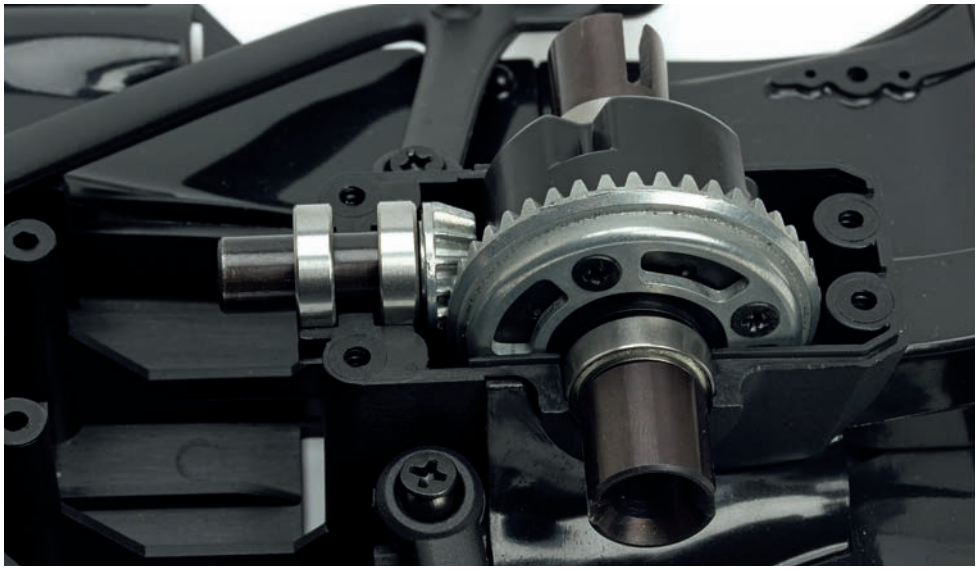

04 Check that the fitted drive bevel gear and shaft looks like this – note the spacing of the ball bearings. Once all is set correctly, this session is complete, so store your model away safely until it is needed, to avoid damaging the mounted parts.