TAMBURO

With Tamburo, we've thrown a major curve to the typical under-cabinet configuration, with a fresh approach that's designed to fit your life. This true original also offers halogen lighting, three speeds and an adjustable utensil bar to keep all of your larger cooking utensils right where you want them—above the cooking surface. New control configuration and 12" depth ensure simple operation and a true fit with popular cabinet styles.

ESSENTIALS

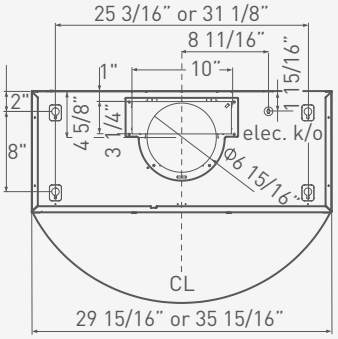

Top

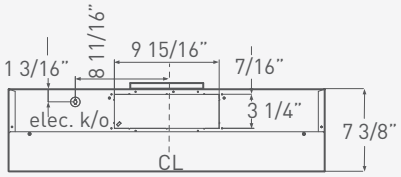

Back

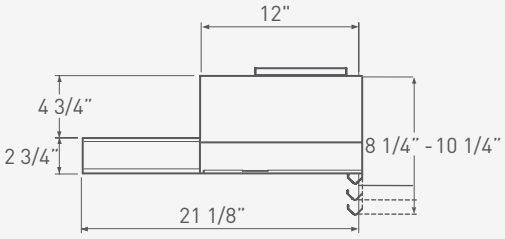

Side

Adjustable Utensil Bar Heights

TAMBURO

UNDER CABINET

MODEL	ZTA-E30AS	ZTA-E36AS
SIZE	30"	36"
NET WIDTH	29 15/16"	35 15/16"
PERFORMANCE		
Internal Blower	400 CFM	400 CFM
Internal Blower Sones	5	5
COLOR		
Stainless Steel	SS	SS
FEATURES		
Controls	Mechanical Slide	Mechanical Slide
Speed Levels	3	3
Auto Delay-Off	No	No
Lighting	Halogen, 50W x 2	Halogen, 50W x 2
Dual-Level Lighting	Yes	Yes
Filters	Metal Mesh x 2	Metal Mesh x 2
Recirculating	Yes	Yes
Duct Cover Extension	NA	NA
Adjustable Utensil Bar	Yes, Up to 3"	Yes, Up to 3"
DUCT SPECIFICATIONS		
Internal Blower - Vertical	7" or 3 1/4" x 10"	7" or 3 1/4" x 10"
Internal Blower - Horizontal	3 1/4" x 10"	3 1/4" x 10"
AC INPUT	120V - 60Hz	120V - 60Hz
AC POWER	Max. 358W, 3.3 Amps	Max. 358W, 3.3 Amps
OPTIONAL ACCESSORIES		
Recirculating Kit	ZRC-0200	ZRC-0200

Mounting Heights	Min. height 24" from cooking surface.	Max. height 32" from cooking surface.

ESSENTIALS
ZEPHYR

Zephyr Corporation
2277 Harbor Bay Parkway
Alameda, CA 94502
1.888.880.VENT
www.zephyronline.com
may08.0101