TUBULAR SKYLIGHT LIGHTING PERFORMANCE

On April 16, 2001 Lighting Sciences, Inc. conducted a test on the light output thru our tubular skylight unit and found the output to be over 54.3 lumens per square inch of diffuser area.

- 10" unit has a lower diffuser surface area of 78.5 square inches producing up to 4239 lumens. This is roughly equivalent to 330 watts of efficient halogen lighting.

- 13" unit has a lower diffuser surface area of 133 square inches producing up to 7221 lumens equaling about 560 watts of efficient halogen lighting.

- 18" unit has a lower diffuser surface area of 254 square inches producing up to 13790 lumens equaling about 1070 watts of efficient halogen lighting.

- 21" commercial unit has a lower diffuser surface area of 346 square inches producing up to 18684 lumens. This is roughly equivalent to 1450 watts of efficient halogen lighting per each 21" Natural Light tubular skylight. <u>This represents the highest output ever tested for a tubular skylight</u>.

Tubular Skylights Save Energy and Light Up Dark Rooms !

Natural Light Tubular Skylight, ***"The contractor's choice",*** is truly an installer-friendly skylight that performs well in any environment. As a manufacturer, we are committed to your sales and service success with this top-of the-line product. Natural Light sets itself apart from other manufacturers by incorporating the highest quality material coupled with a superb quality assurance program to ensure the best product available on the market today. We know this because we've been an installer, a dealer, and a distributor for several tubular skylights that are on the market today.

This as a great product, which we think may be beneficial to your existing customer base. The tubular skylight industry, although still in its infancy, is rapidly gaining acceptance with homeowners across the country and as a result, sales and installation of these units are growing exponentially. Unlike traditional skylights, there is no heat gain/loss associated with the product, nor are there any framing, painting or drywall issues to contend with. Installed in less than two hours, the tubular skylight is the only answer to today's demanding and cost conscious homeowner. Natural Light has passed I.C.B.O. evaluations, carries a 25-year warranty, and is quality built in the USA. Sizes range from 10 inch, 13 inch, 18 inch, and 21 inch and can be installed in residential, commercial and industrial applications. The skylights can be installed on all roof types and systems, existing or new construction, and comes with a number of options that can be tailored to consumer requirements.

SKYLIGHTS

Dark rooms are an unnecessary relic of the past. Natural day lighting through the use of new skylight technology is one of the most beneficial and energy efficient projects for your home. Skylights can be installed quickly and inexpensively, remodeling your home in just a few hours.

Lighting from natural sunlight has aesthetic as well as psychological benefits. Studies show that children learn up to 26% faster in natural lighting versus artificial lighting. Choosing clothing and cosmetics is much easier under sunlight. Sunlight has been shown to have a positive effect on reducing depression and stress. Even food looks better under natural light.

According to the (AAMA) American Architectural Manufactures Association, skylights are the premier application of passive solar energy known today. They are the most energy efficient and cost effective of all passive solar applications. The federal Government classifies them as a "Renewable Resource Energy Measure." In Arizona, the state government recognizes tubular skylights are solar energy efficient products which can qualify for a 25% (of the total price) of State Tax Credit.

If you are buying, building, or remodeling a home, room, or office, consider the following questions:

1. Do you want to spend money on electricity, or use free sunlight? Will certain areas require electric lighting during the day if no skylights were installed?
2. What color spectrum of lighting is acceptable in different areas? Natural lighting is best for closets, bathrooms, workshops, craft rooms, hallways, dining rooms, and cooking areas.
3. How much light is transmitted by windows and reflected light?
4. What is the orientation of your windows? North produces indirect lighting. East can be intense in the morning and indirect in the afternoons. West is intense in the late afternoon and indirect in the morning. South is intense in the winter, and indirect in the summer.

The new designs, unlike traditional skylights, bring in more light with almost no heat gain or loss, and cost only a fraction of the cost. Installation can be done within a few hours by trained installers, and the manufactures also offer do-it-yourself kits that can be installed by the average home handy-person. Skylights are designed with the ability to bend around objects such as ductwork, pipes, or electrical lines and can be placed in most locations. No structural changes are needed. They require no framing, dry walling, or painting.

10" Spec Sheet

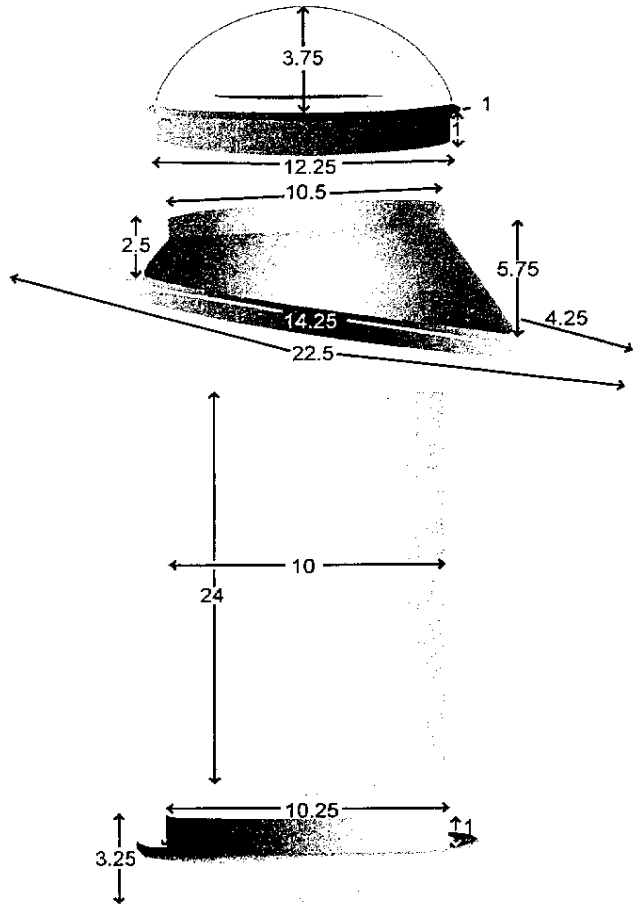

13" Spec Sheet

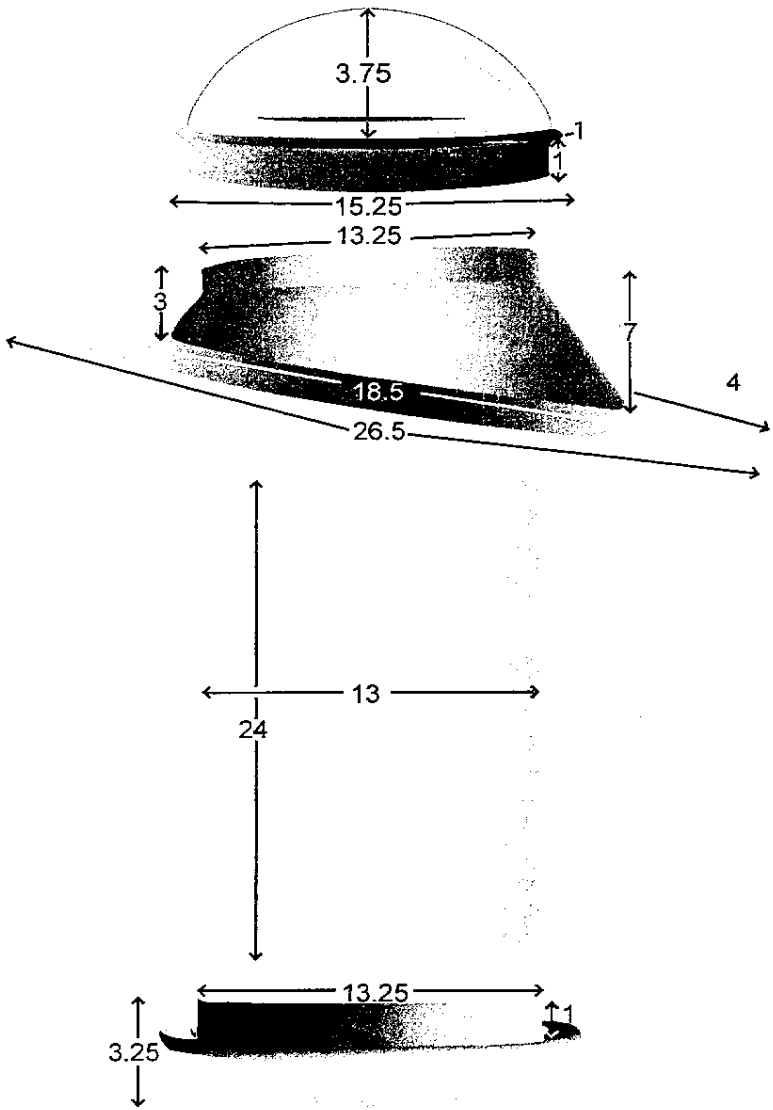

Natural Light Tubular Skylight Technical Specifications

Dome:
Dome material is constructed of 100% Impact Modified Acrylic that provides unsurpassed weatherability and superior impact strength. The dome is able to withstand large temperature swings, and is UV stabilized, absorbing 99% of the UV rays, and maintains a very clear optical clarity in any environment. Dome material is 20-30 times stronger than double strength window glass and 10 times stronger than general purpose acrylic.
The dome is designed with condensate drainage in mind and with a low profile to minimize aesthetic concerns. It also offers low wind resistance and excellent water shed capabilities.
The dome is set in a seamless aluminum collar that allows for easy attachment to the flashing and absorbs stress from environmental affects, thus ensuring uniform stress being exerted on the dome surface at all times.

Diffuser:
3/16 square base conical prism pattern that provides maximum efficiency lighting with excellent glare control. Constructed of 100% impact modified UV stablized acrylic, with the same quality features of the dome. The diffuser is designed with a specific arc that produces the maximum dispersion of light thereby ensuring no "spotlight" effects, which provides the best light transmittance and scattering capabilities.

Light pipe:
Manufactured by an industry leader for over thirty years, Material Sciences Corporation, who offers the most advanced method of thin-film metallizing available today, resulting in the most enduring and most reflective material in the lighting industry.
Manufactured with the highest optical properties with a lab tested total reflection of 95% (according to ASTM E-1651) and a laboratory tested Brightness- Image Clarity 96 (according to ASTM E-430)
The light pipe is constructed of aluminum and is thin enough to be easily trimmed with a utility knife or shears. The thin wall construction of the light pipe dissipates any heat build-up into the attic space.

Flashing:
The flashing or roof jack is constructed of 1100 series, .060 aluminum, whose unique shape is formed by using a process of machine spinning and high pressure punching resulting in a seamless unit that is capable of being installed on virtually any type roof either flat or pitched. This heavy duty flashing is designed to weather the elements in any environment. The round shape of the flashing is designed to dissipate stress uniformly over the entire unit, and allows for easy installation without disturbing much of the roofing material. The forward sloping design provides a built in angle of 27° or about a

5/12 pitch, thus negating the need for light robbing elbows and avoiding reverse reflectivity of the light. In application greater than 5/12, elbows are required.

Trim Ring:
Constructed of seamless aluminum and powder-coated white, the trim ring is designed to fit aesthetically into any room décor. The low profile aspect allows for proper diffuser placement maximizing light by utilizing the full inner diameter of the light pipe. Constructed to exact standards, it ensures a tight dust and moisture free seal.

Hardware Kit:
Each tubular skylight kit comes with a hardware kit to ensure a complete and secure installation. Dome attachment screws and roof flashing attachment screws are zinc plated to withstand the elements. All screws are self-tapping to aid in east of installation. Gaskets are pre-cut and are constructed of the highest grade of materials. The sealant provided is a neutral cure 100% RTV silicone, which offers excellent adhesion to most materials. It cures in 24 hours and remains flexible from –85 to 350F, and is backed by a 50 year warranty. Passes ASTM C 920 and UL QMFZ2 94HB as well as Federal Specifications TT-S-001543A and TT-S-00230C.

Performance:
A ten inch unit emits approximately 300 watts of light and is capable of illuminating a room 10' x 10'.

Installation Instructions

These instructions include steps for tile, shingle, shake shingle, flat and metal roofs. Please call your distributor for special instructions or questions not covered in this manual.

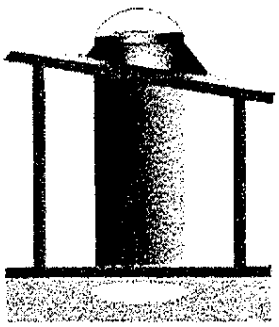

Important

BEFORE INSTALLING:

Please take time and read through the entire instructions prior to commencing any work.

Precautions

1. Light Pipe material is very sharp when cut. Please use extreme caution when handling light pipe.
2. Light Pipe is very bright, use proper eye protection when installing, and avoid leaving the pipe exposed to the sun without the protective coating or diffusers in place.
3. Ensure normal safety precautions are taken when using tools and walking on roofs.
4. Do not cut any structural members in the house.
5. Ensure wire runs, plumbing or ventilation ducts will not interfere with the light pipe installation.
6. Measure twice and cut once.

Tools Required

- Reciprocating Saw
- Measuring Tape
- Hammer
- Drill & Bits
- Drywall Saw
- Razor Knife
- Flat Bar
- Flashlight
- Caulking Gun
- Stud Finder
- Drop Cloth
- Ladders
- Marking Pen
- Right angle screw driver
- Tin Snips

Installation Pointers

When determining location of the unit, try to place the flashing unit on the south side of the roof, also consider potential problems such as objects shading the unit during certain times of the day.

Although adjustable elbows are available for use, straight light pipe runs result in higher light output and easier installation.

Prior to starting the job, clean off the oil residue on the flashing.

Make templates for the holes that need to be cut:

Ceiling-use the outer diameter of the trim ring for sizing. Attach a handle and mark the size and "ceiling" for easy identification.

Roof-use the outer circumference of the flashing hole for sizing. Attach a handle and mark the size and "roof" for easy identification.

Using two 15 inch long phillips head screw drivers, bend each shaft 90 degrees, one at 5.5" and the other at 6.5". This will result in two right angle pointers that aid in verifying clearances above the ceiling for trim ring placement.

5. With a razor knife, cut a four inch slit through the shingles and tar paper at the three and nine o'clock position of the flashing. This allows for the sides of the flashing to be inserted under the shingles.

6. Insert the reciprocating saw blade sideways at the three o'clock position and commence cutting roofing nails up and around to the nine o'clock position. This process removes the nails that will prevent the flashing from sliding up underneath the shingles.

7. Caulk underside of flashing with the provided caulking material. Two concentric rings of caulking material is sufficient.

8. Taking care not to smear caulk on the exposed shingles, slide flashing under tar paper and shingles and force flashing up until the shingles come in contact with the raised portion of the flashing. The bottom side of the flashing will be on top of the shingles. Secure flashing with four hex head screws at the 3:00, 6:00, 9:00 and 12:00 positions, making sure that at the 3:00, 9:00 and 12:00 positions, the screws are placed under the shingles. At the 6:00 position, caulk over the screw head since it will be exposed to the weather. Use remaining caulk to seal the areas where the 4" slits were made and around the area where the shingles meet with the raised area of the flashing. Peel the protective backing off the black horse hair gasket and apply gasket on the inner lip of the flashing collar.

9. To assemble light pipe, peel back the protective coating that covers the mirror coating about 1/2" from the opposite edge of the double sided tape, remove paper cover over double sided tape and overlap and seal edges. Put pressure on both sides of seal to ensure a good bond. Place foil tape over the seam to strengthen seal. When joining two pipe sections together, with the crimped end down, place crimped end into the next section of pipe and secure with a 2 tek screws and seal joints with foil tape. Make sure protective coating that covers the mirror finish is removed prior to installation.

10. Insert pipe through the flashing unit and gently rock pipe back and forth with slight downward pressure until pipe terminates evenly with the inner collar of the trim ring. Secure bottom of light pipe to trim ring with two tek screws.

11. If there is excess pipe sticking out of the flashing, use a razor knife to scribe a mark around the pipe, using the top of the flashing unit as a guide. Using tin snips, cut from the top down to the scribed mark and then pull pipe using the top edge of the flashing as a guide. This provides a clean cut and results in an even looking termination. Place dome on top of the flashing unit. In area of high humidity, the dome collar can be moved up slightly on the flashing unit so as to provide a condensate drain. Secure dome to flashing by screwing in four screws into the pre-drilled holes in the dome collar.

12. Snap diffuser into trim ring by gently placing diffuser into the curved radius of the trim ring. Exert pressure around the circumference of the diffuser until the diffuser pops into place.

Natural Light Incandescent Light Kit Installing Instructions

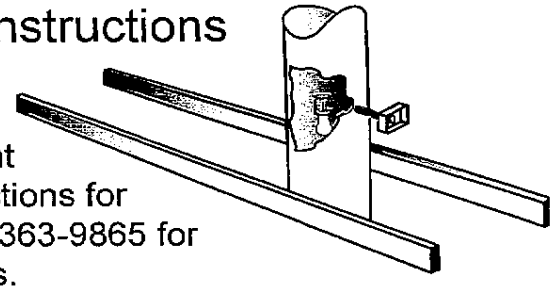

THANK YOU for investing in a Natural Light Tubular Skylight System electric light kit. This manual includes installation instructions for our Incandescent light kit. Please call our Tech Hotline at 1-800-363-9865 for questions or special instructions not covered in these instructions.

PLEASE READ BEFORE INSTALLING

Step #1 Determine a location that is attic accessible. Remove the protective liner off the inside of the Natural Light pipe. Using a sharp 1/2 inch drill bit, drill a 1/2 inch hole 9 inches up from the ***bottom*** of the Natural Light pipe. WARNING: Do not change the location of the hole for mounting the light kit, doing so will void the warranty and impairs safe temperature and electrical performance.

Step #2 The Main lamp bracket is already assembled from the factory. You will need to remove the conduit connector, the nut and washer from the threaded bracket tube. Next, thread the bracket through the 1/2 inch hole that you just drilled in the Natural Light pipe, starting from the inside of the light pipe, and align the light kit as pictured. Secure the light kit bracket to the light pipe using the aluminum "I" shaped bracket and tighten (snug). The "I" shaped bracket rests on the inside of the light pipe, and the washer and tightening nut are on the outside of the light pipe.

Step #3 Push the exposed wires through the hole that the conduit will be attached to. Adjust the threaded rod conduit into the 4" x 4" electrical box and tighten the conduit connector.

Step #4 Bring in the switched 120 VAC supply wiring into the 4" x 4" electrical box and secure as pictured. it is important that all wiring complies with local codes, be properly grounded, (and recommended) all AC feed wiring should be through a GFCI branch circuit, connect all wires as pictured.

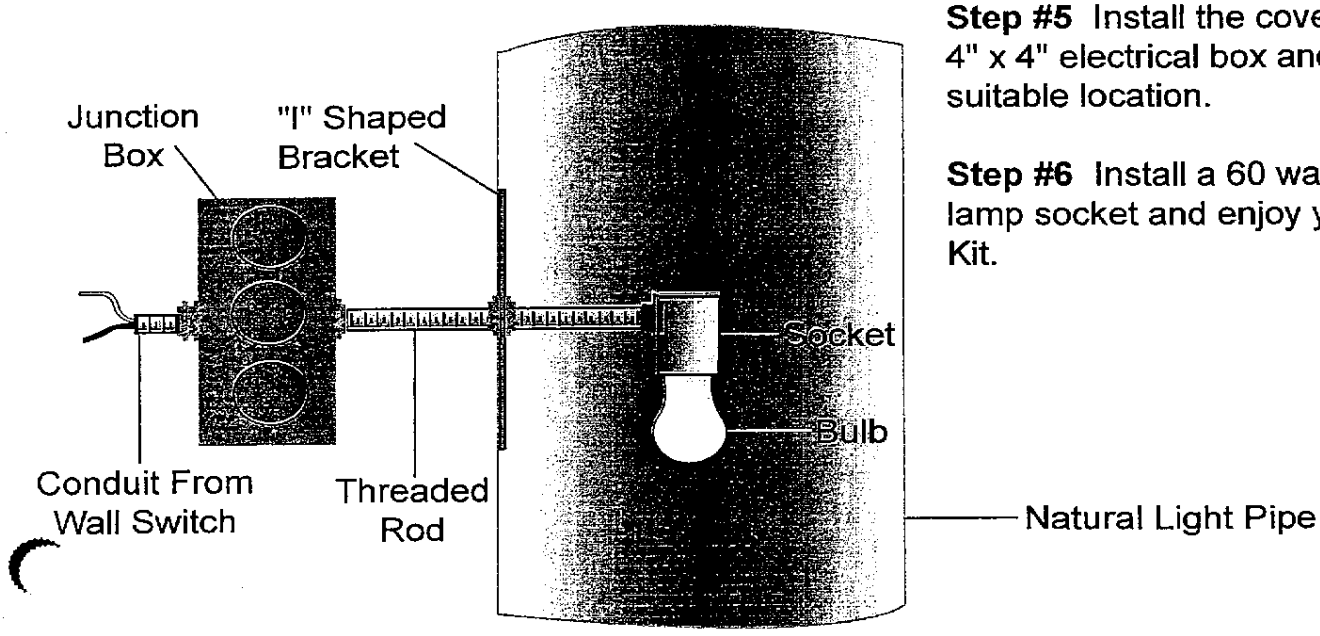

Step #5 Install the cover onto the 4" x 4" electrical box and secure to a suitable location.

Step #6 Install a 60 watt lamp in the lamp socket and enjoy your new Light Kit.

Natural Light Tubular Skylights

SVFAN—Installation Diagram

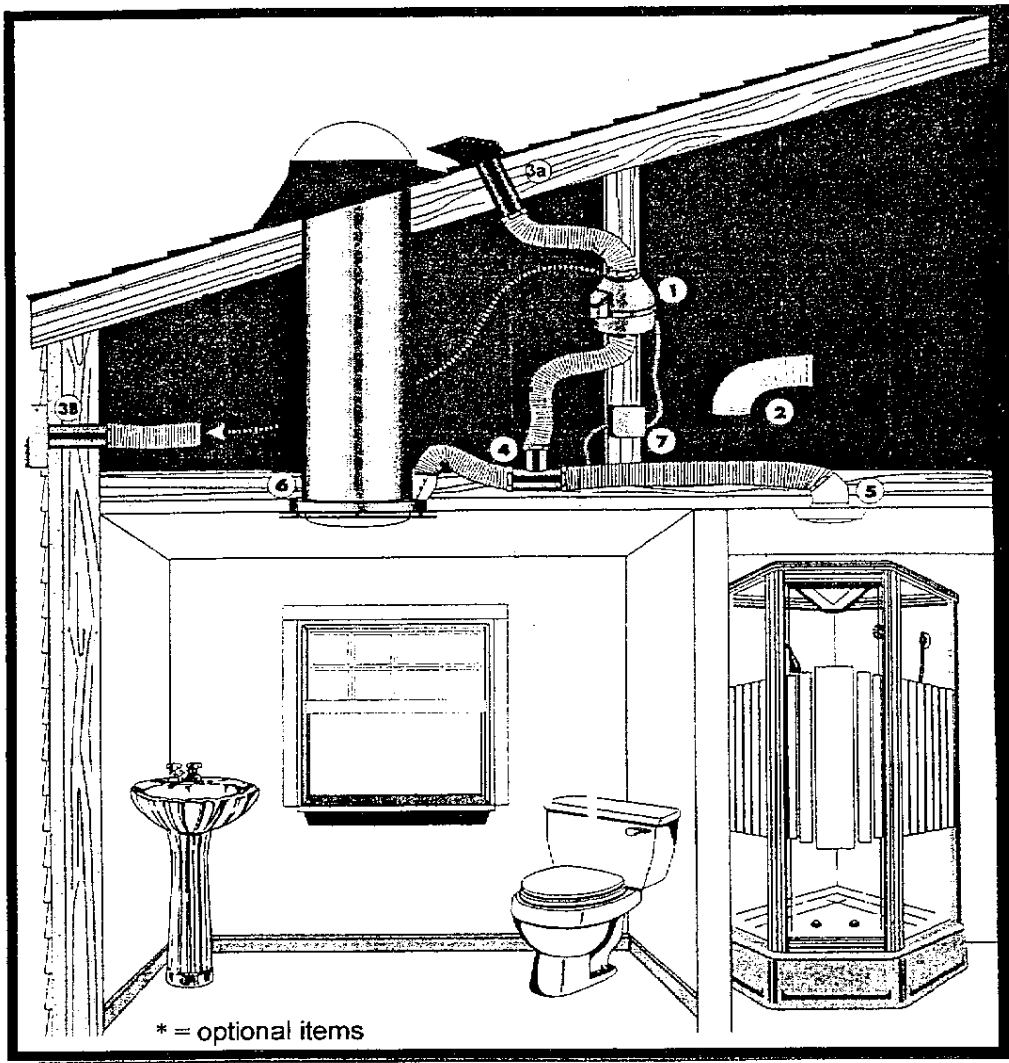

Parts Lists

(1) High Performance 125 CFM Remote Exhaust Fan Motor, 120 VAC
Stock # SVFAN-Motor

(2) Insulated Flexible 4" Exhaust Duct
Stock # SVFAN-Vent Tubing

(3a) Roof Cap Stem Vent *
Stock # SVFAN-Vent

(3b) Side Wall Vent
Stock # SVFAN-SVent

(4) Galvanized Vent T-Adapter *
Stock # SVFAN-T-Conn

(5) Remote Inlet Vent 4", white *
Stock # SVFAN-Grill

(6) Vent Exhaust Cowl Ring Assembly
Stock # SVFAN-Cowing

(7) Electrical Box 4" x 4" with cover for switched 110 VAC input power
Stock # SVFAN-Electrical Box