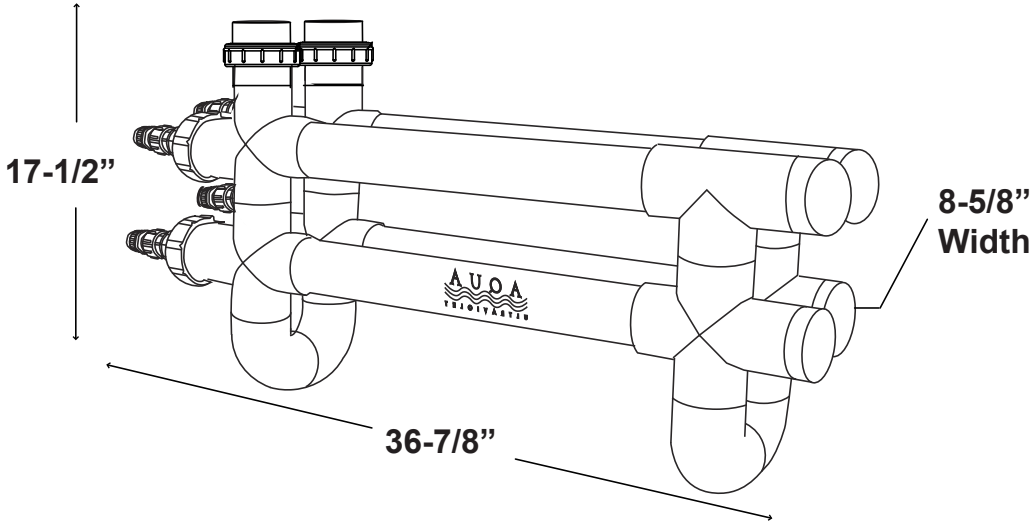
17-1/2”
8-5/8”
Width
36-7/8”

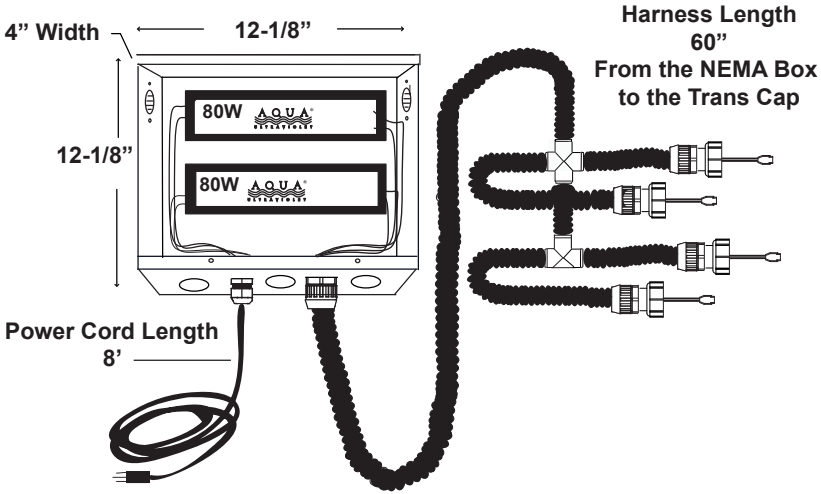
4” Width
12-1/8”
Harness Length
60”
From the NEMA Box
to the Trans Cap
80W
80W
12-1/8”
Power Cord Length
8’