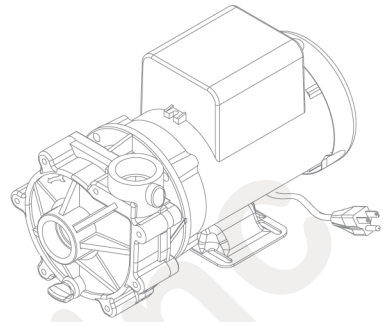

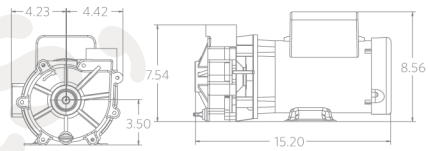

*Dimensions and illustrations are approximate and for reference only

Sequence® 1000 Series - Model 6100SEQ23

The Classic! The 1000 series has set the standard by which all others are measured. Perfect blend of medium pressure and ample flow for the majority of ponds.

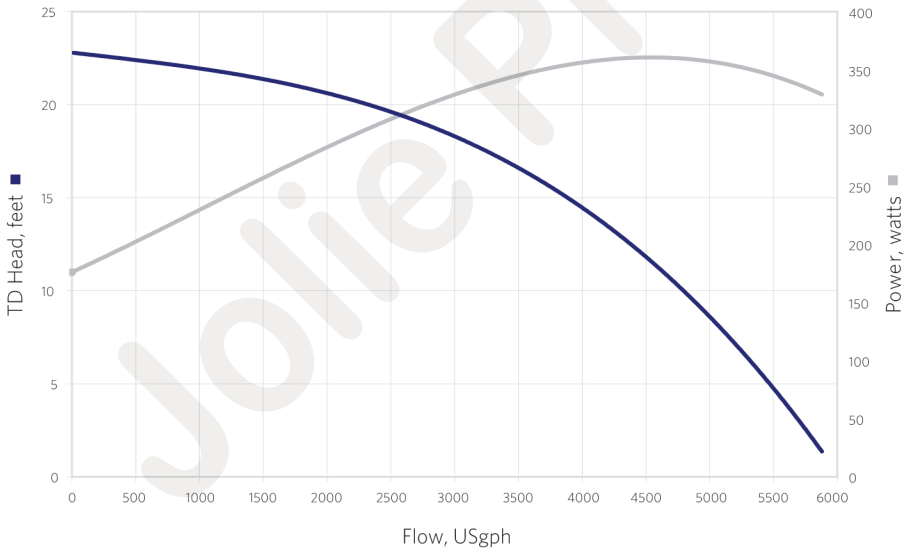

Flow At Total Dynamic Head	4′	8′	12′	16′	20′
GPM	93	85	75	60	40
GPH	5580	5100	4500	3600	2400

3 YEAR LIMITED WARRANTY

8 FOOT CORDSET

TEFC FANCOOLED MOTOR

MODEL	6100SEQ23
INLET	1.5″
DISCHARGE	1.5″
MAX FLOW (gph)	6100
MAX HEAD (feet)	23′
MAX POWER (watts)	366
MAX CURRENT (amps)	3.03
@ (volts)	115/230
MOTOR HP	⅓, ¼, ⅙, ⅛
MOTOR TYPE	56J
MOTOR ENCLOSURE	TEFC
IMPELLER	7

JolieProducts Inc