KCPU-1

Weight Capacity 20lbs(8kg) for Each Monitor

User's Manual
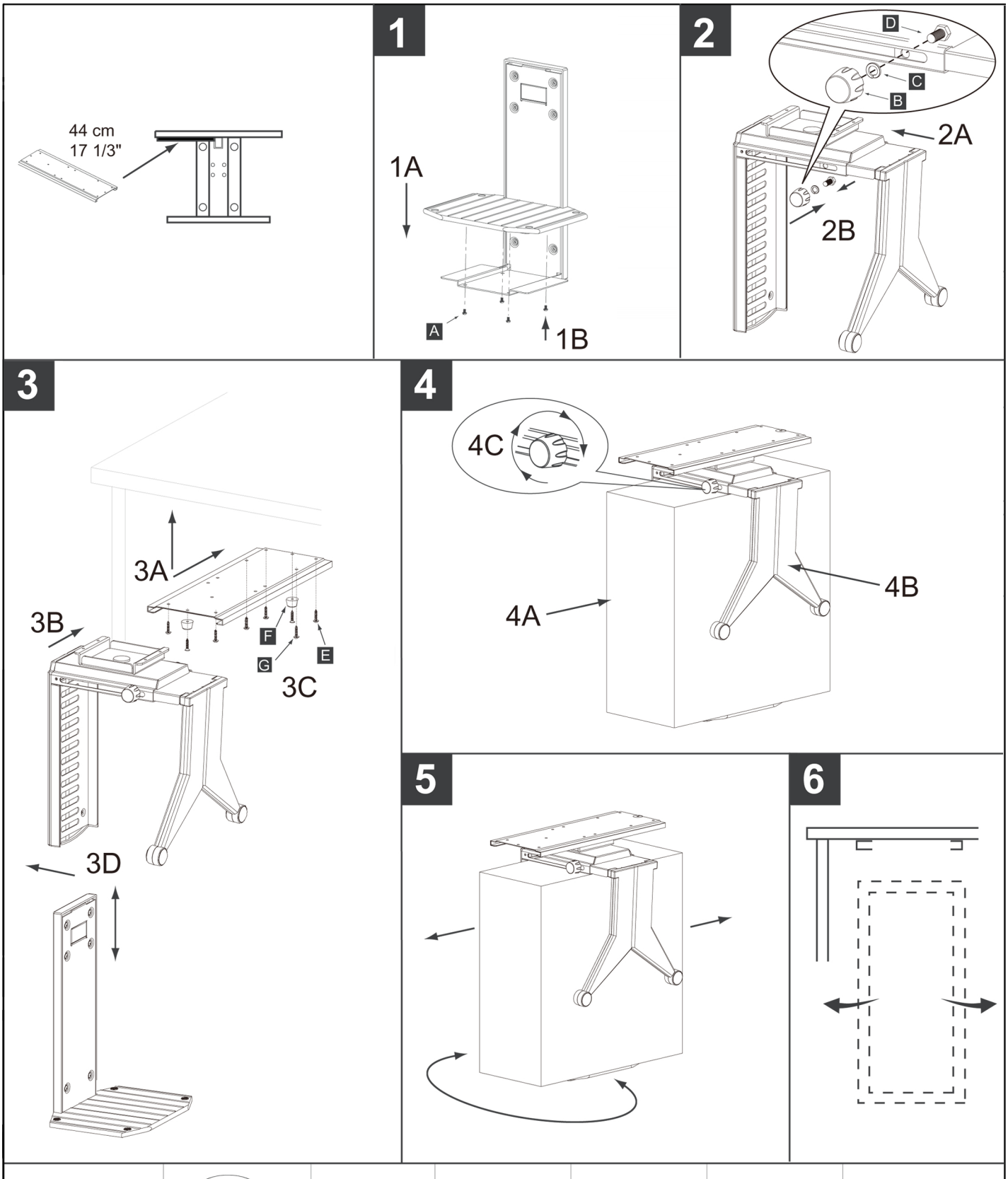
If you want to learn more about Cotytech Mounts, you may visit http://www.cotytech.com or call 1-888-891-9321