Installation Manual

Modle #: KB-1M

Cotytech®
www.cotytech.com
888-891-9321

1

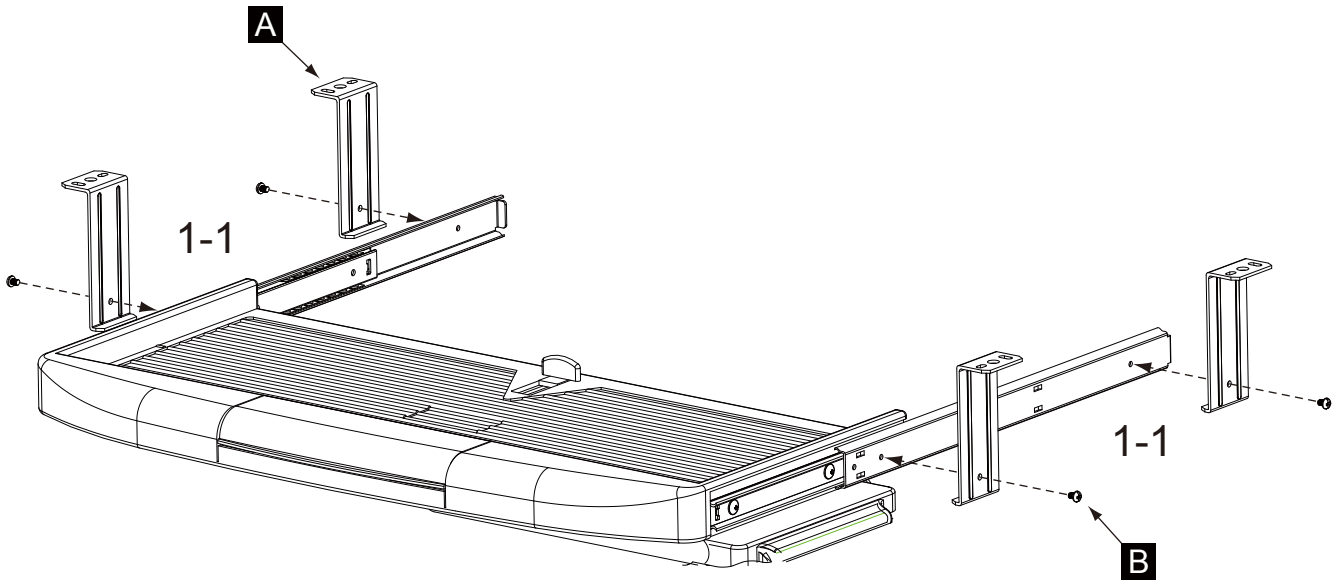

A	B
Q.ty 4	M4x5 Q.ty 4

2

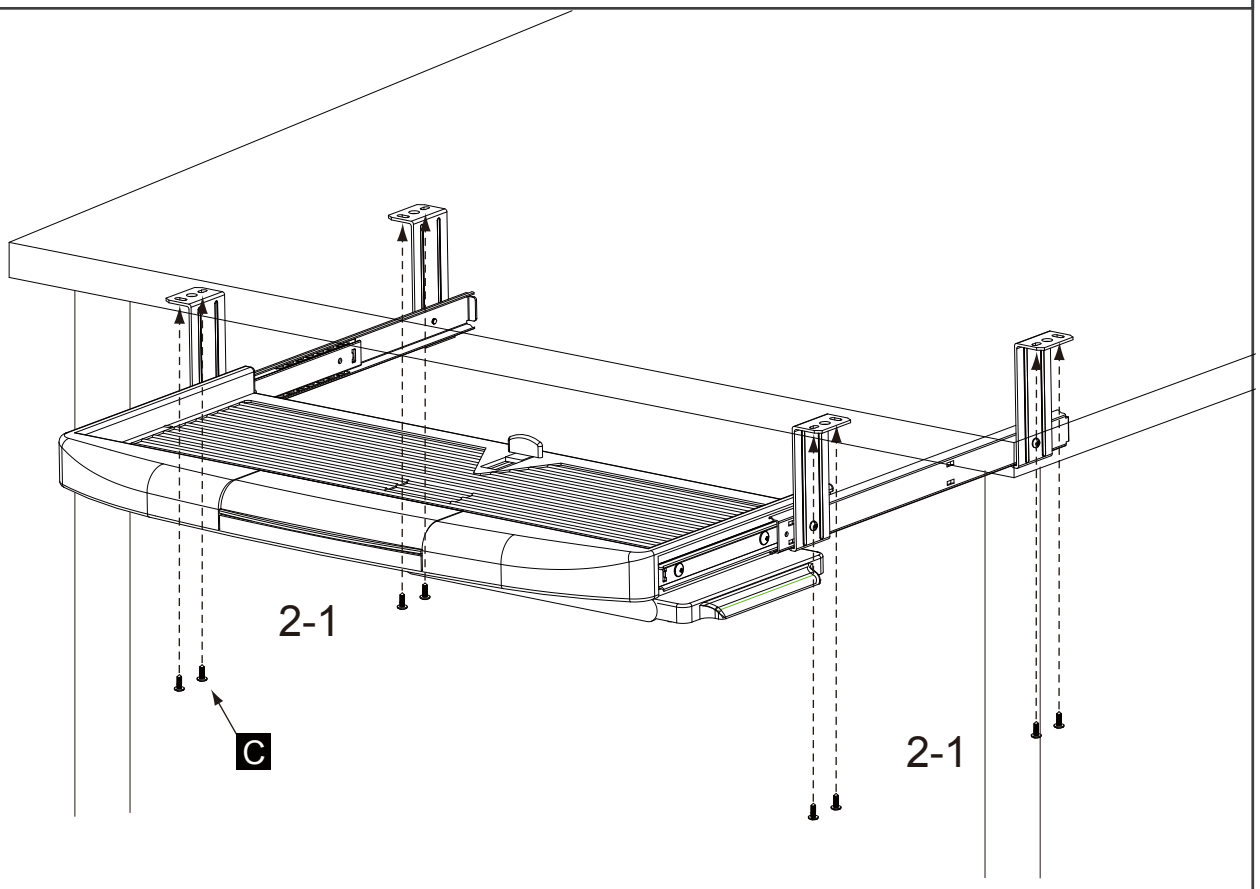

C
Φ4x12 Q.ty 8