DM-41A2

Weight Capacity 20lbs(8kg) for Each Monitor

User's Manual

If you want to learn more about Cotytech Mounts, you may visit http://www.cotytech.com or call 1-888-891-9321

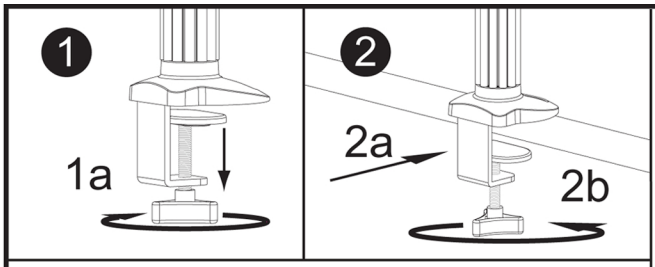

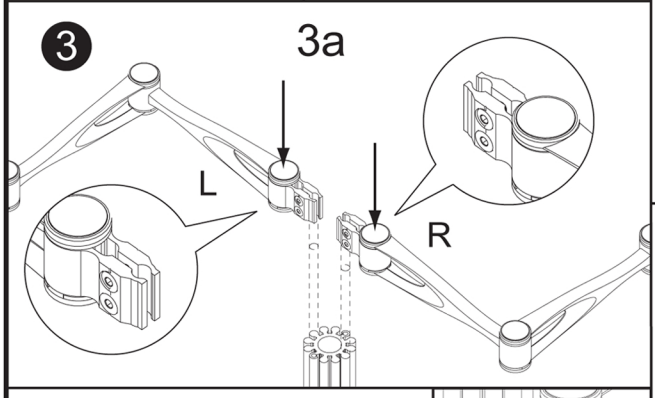

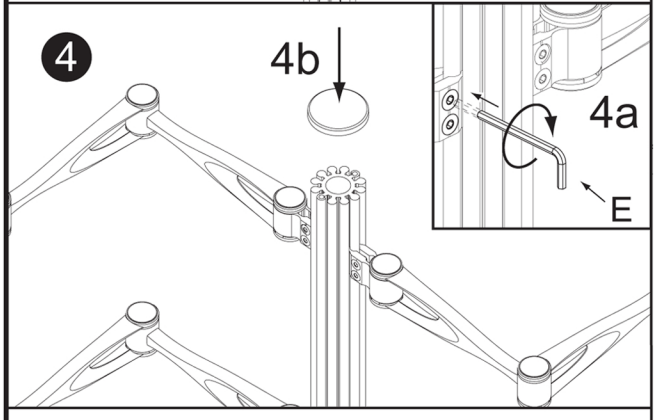

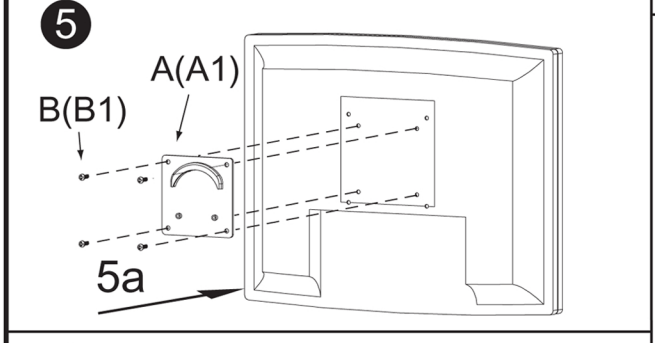

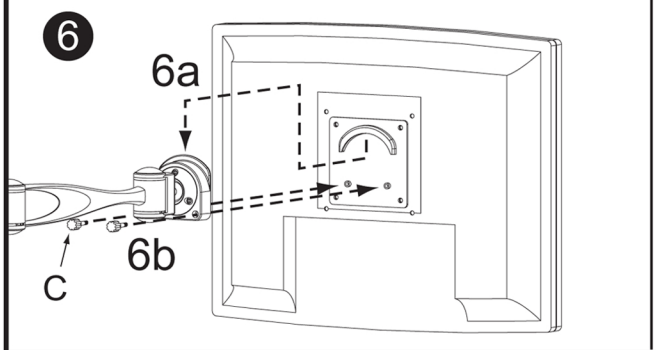

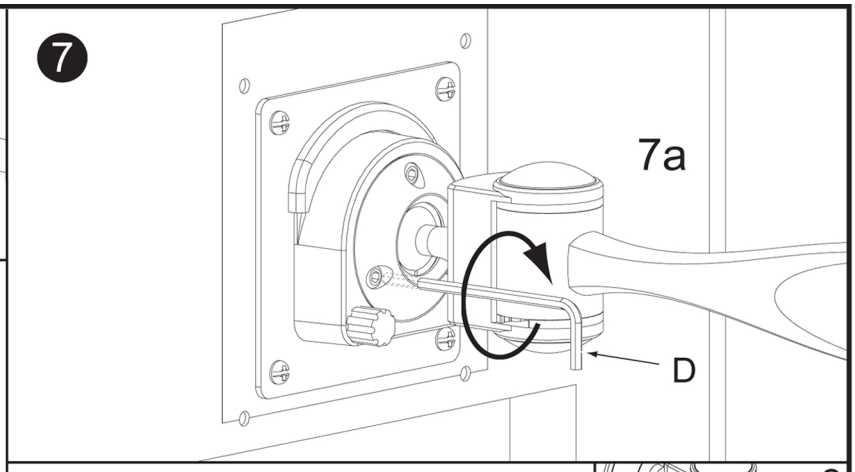

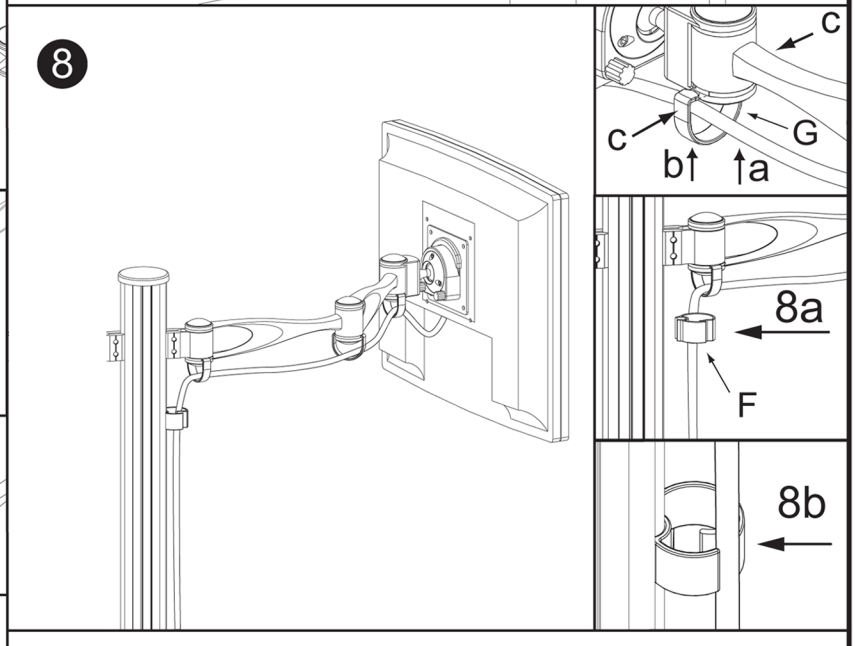

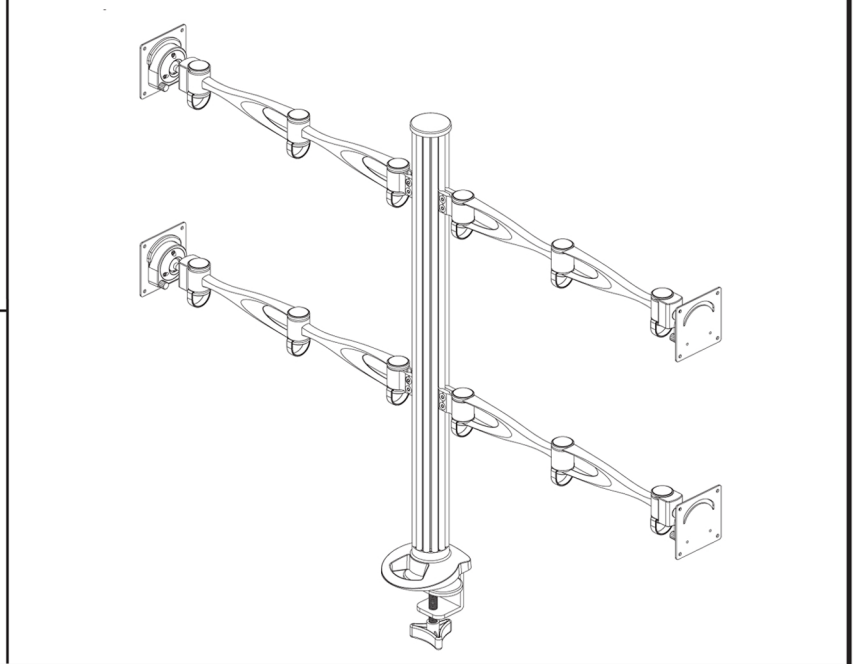

Q.ty 4 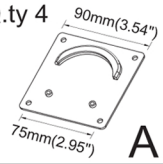 A	Q.ty 4 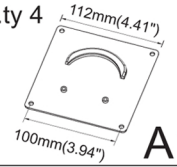 A1	Q.ty 4x4 B	Q.ty 4x4 B1	Q.ty 2x4 C	Q.ty 1x4 D	Q.ty 1x4 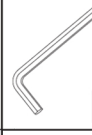 E	Q.ty 2x4 F	Q.ty 12 G
75mm (2.95")	100mm (3.94")	M4 L8	M4 L15					