REVISION HISTORY			
REV	DESCRIPTION	DATE	APPROVED

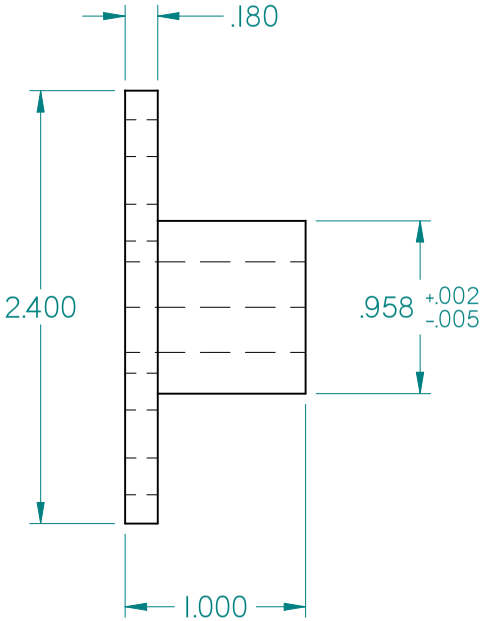

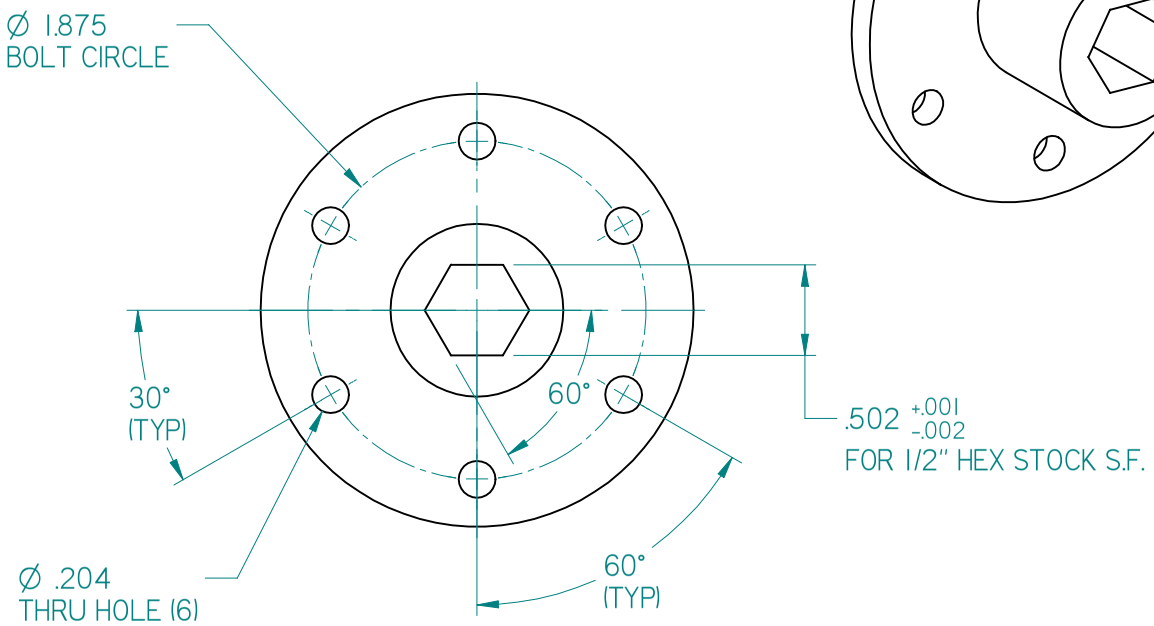

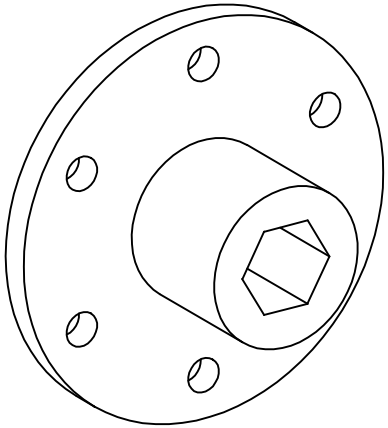

Material: Aluminum
Qty. : 1
Finish: Tumbled

	NAME	DATE
DRAWN	Andy Baker	12/07/06
CHECKED		
ENG APPR		
MGR APPR		

UNLESS OTHERWISE SPECIFIED
DIMENSIONS ARE IN INCHES
ANGLES ±0.5°
2 PL ±0.01, 3 PL ±0.005

AndyMark.biz
Standard Solutions for Competition Robots

TITLE: 1/2" Hex Hub

SIZE A2 | DWG NO 500_Hex_Hub.dft | REV 1

FILE NAME: 500_hex_hub.dft

SCALE: | WEIGHT: | SHEET 1 OF 1