GENUINE ACCESSORIES

INSTALLATION INSTRUCTIONS

PART NUMBER:
0000-8E-R04

APPLICABLE MODELS:
2013 > CX-5

TRAILER HITCH HARNESS KIT

PACKAGE CONTENTS

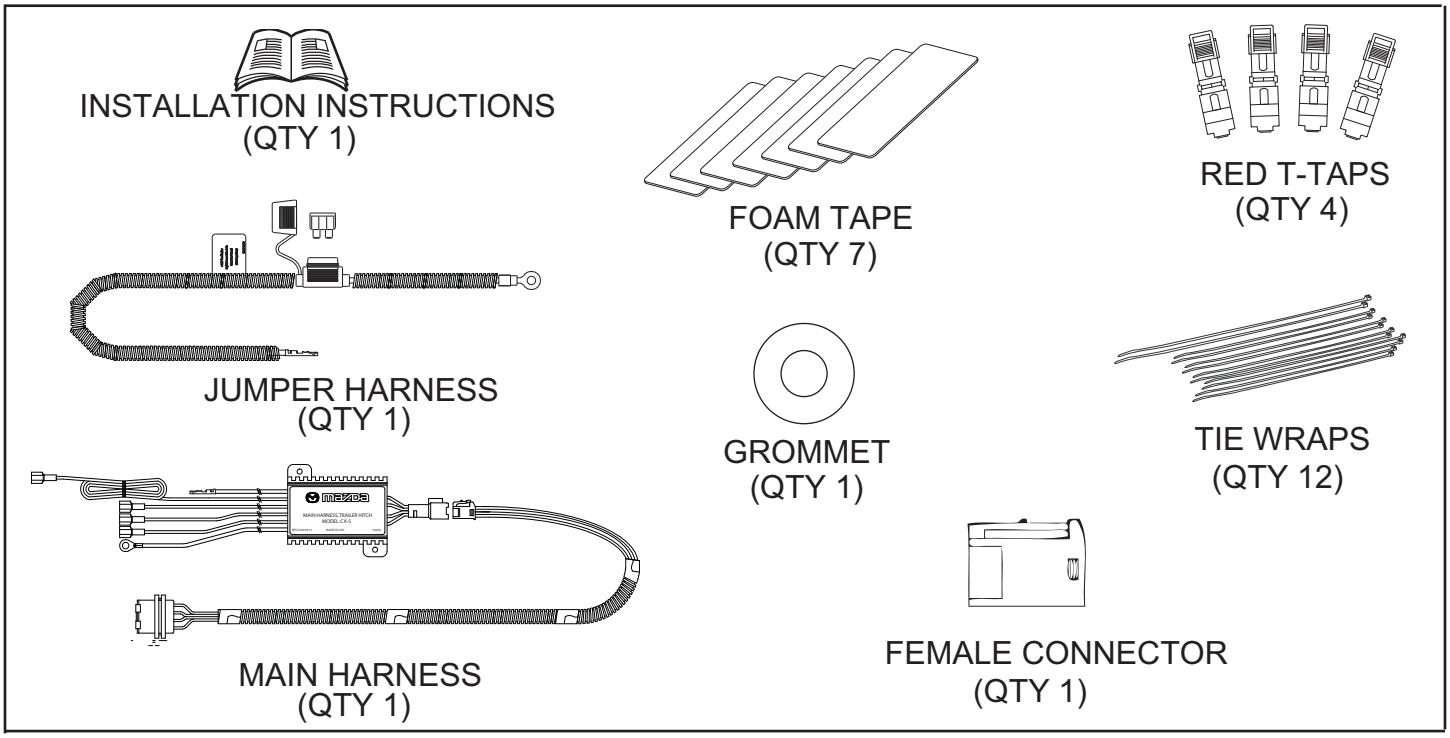

TOOLS REQUIRED

8 MM SOCKET WRENCH
10MM SOCKET WRENCH
PHILLIPS SCREWDRIVER
PLASTIC PANEL REMOVAL TOOL
PLIERS
WIRE CUTTERS
FLAT HEAD SCREWDRIVER
HOBBY KNIFE
SEAM CUTTER
ALCOHOL WIPE
RTV SILICONE INSTANT GASKET
(*EQUIVALENT TO PRO SEAL #80044*)

0 *BEFORE INSTALLATION*

A) READ ENTIRE INSTALLATION INSTRUCTIONS BEFORE PROCEEDING.
B) BE CAREFUL NOT TO DAMAGE VEHICLE PAINT OR KIT COMPONENTS.
C) DO NOT OVER TIGHTEN BOLTS, TIGHTEN TO SPECIFIED TORQUE.
D) RECORD CUSTOMERS PRESET RADIO STATIONS (IF APPLICABLE).
E) USING A 8 MM SOCKET, REMOVE NEGATIVE (-) BATTERY TERMINAL.

1 REMOVE THE REAR THRESHOLD PLATE AND REAR FLOORING

1. OPEN THE REAR HATCH OF THE VEHICLE. FOLD REAR SEATS FORWARD AND RETRACT CARGO COVER (A), IF EQUIPPED.
2. LOCATE AND REMOVE THE EIGHT PUSH PINS IN THE FLOOR DECK PANEL.
3. REMOVE FLOOR DECK PANEL (B) AND FOAM INSERTS (C).

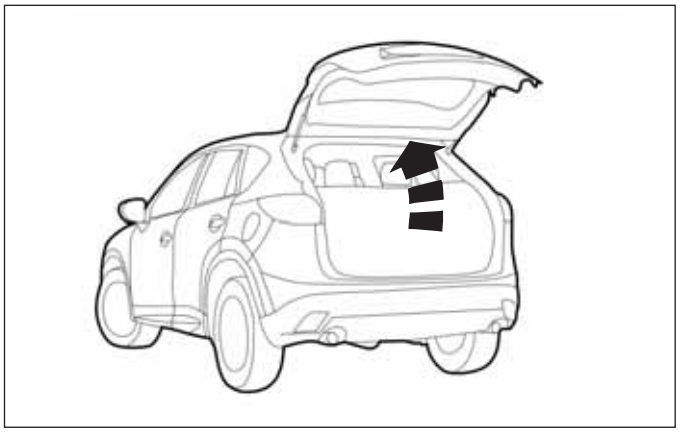

2 REMOVE THE REAR THRESHOLD PLATE AND REAR FLOORING

1. USING A PLASTIC REMOVAL TOOL, REMOVE THE PLASTIC PUSH NUTS (D) LOCATED ON EACH SIDE OF THE THRESHOLD PLATE (E).
2. FIRMLY PULL UP ON THE THRESHOLD PLATE AND TEMPORARILY REMOVE FROM VEHICLE.

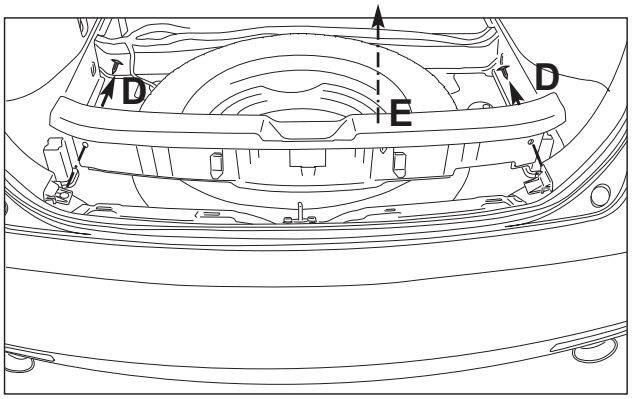

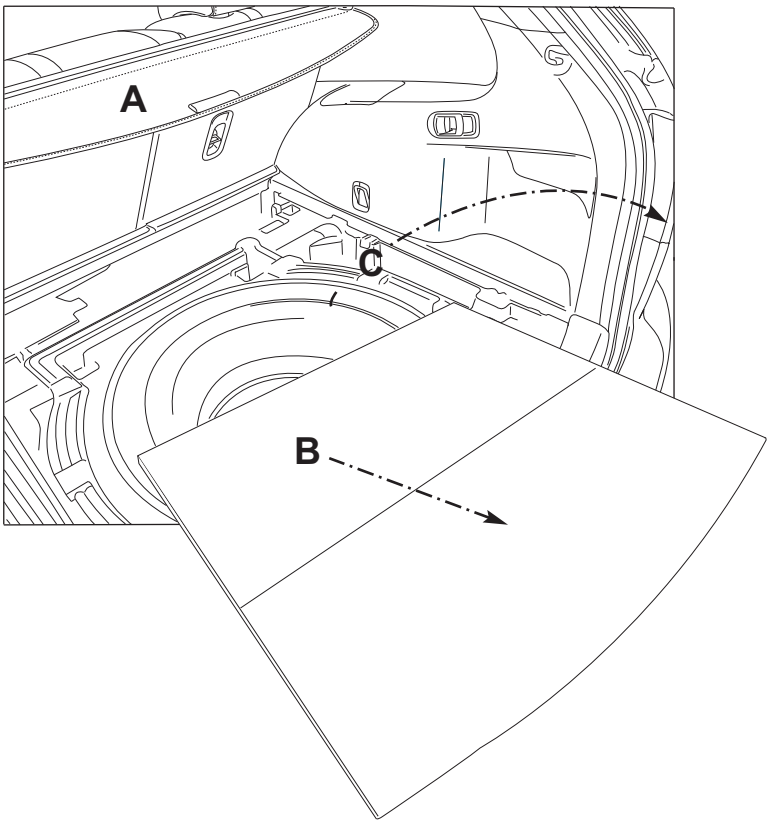

3 ACCESS WIRE HARNESS BEHIND INTERIOR TRIM PANELS

1. CAREFULLY REMOVE THE LEFT (DRIVER'S) SIDE WIRING HARNESS ACCESS PANEL (F) FROM THE INTERIOR TRIM PANEL BY CAREFULLY PULLING INWARD.

2. REMOVE THE TWO CARGO TIE DOWNS (G) FROM THE LEFT SIDE TRIM PANEL.
   A. USING A SMALL FLAT TIP SCREWDRIVER, CAREFULLY PRY UP THE TRIM COVER ON EACH TIE DOWN.
   B. REMOVE THE BOLT SECURING THE TIE DOWN TO THE VEHICLE USING A 10mm SOCKET.

   NOTE: REASSEMBLY TORQUE:
   0.9 - 1.3 N-m
   9.2 - 13 kgf-cm
   8.0 - 11In lbf

3. REMOVE THE RELEASE LATCH COVER MOUNTING SCREW (H) FROM THE LEFT SIDE TRIM PANEL.
   A. USING A SMALL FLAT TIP SCREWDRIVER, CAREFULLY PRY OUT THE TRIM COVER ON THE HANDLE.
   B. REMOVE THE PHILLIPS HEAD SCREW SECURING THE LIFT HANDLE TO THE VEHICLE.

4. REMOVE THE TWO BLACK PUSH NUTS (I) LOCATED AT THE LOWER INSIDE EDGE OF THE INTERIOR TRIM PANEL.

5. CAREFULLY PULL THE TRIM PANEL (K) BACK TO EXPOSE THE VEHICLE WIRING HARNESSES. BE CAREFUL NOT TO DAMAGE CARGO LIGHT.

6. CAREFULLY REMOVE THE RIGHT (PASSENGER) SIDE WRING HARNESS ACCESS PANEL (L) BY CAREFULLY PULLING INWARD.

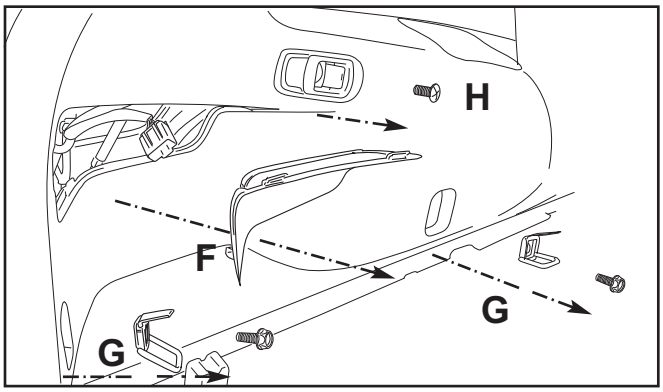

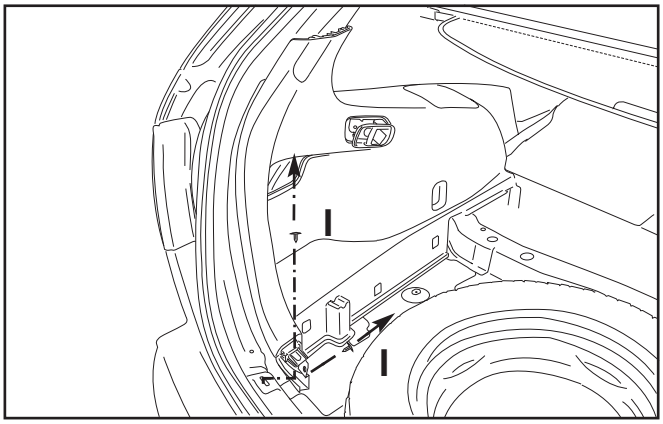

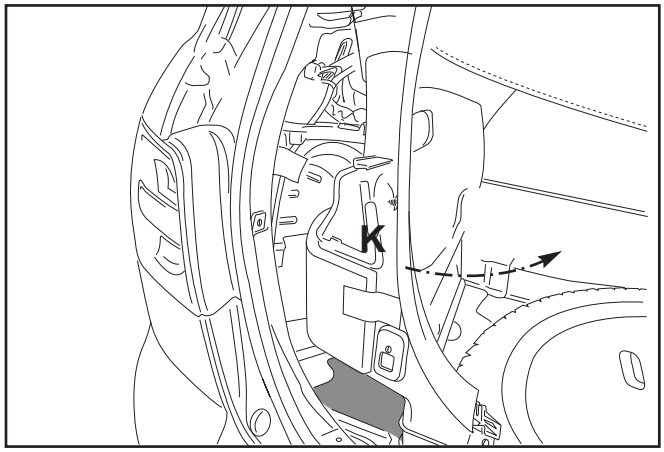

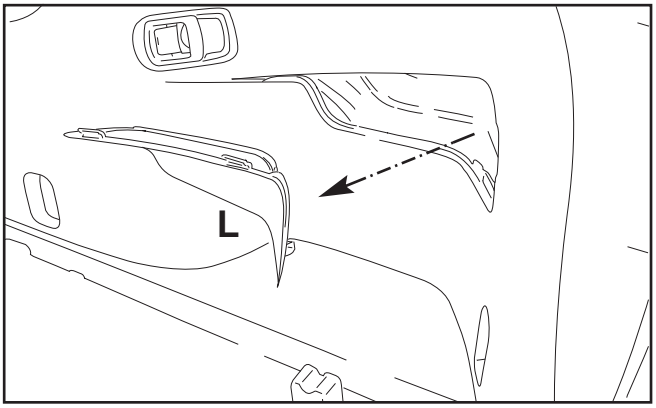

4 MOUNT MAIN HARNESS ASSEMBLY

1. CLEAN THE INDICATED AREA BEHIND THE DRIVER'S SIDE TRIM PANEL WITH AN ALCOHOL WIPE.
2. REMOVE THE ADHESIVE BACKING FROM THE MAIN HARNESS'S MODULE.
3. SECURE THE MAIN HARNESS MODULE TO THE SIDE OF THE VEHICLE BY PRESSING FIRMLY DOWN ON MODULE BODY.
   NOTE: PRIOR TO PERMENANTLY MOUNTING, ENSURE THAT THERE IS ADEQUATE CLEARANCE BETWEEN THE MODULE AND THE INTERIOR TRIM PANEL.

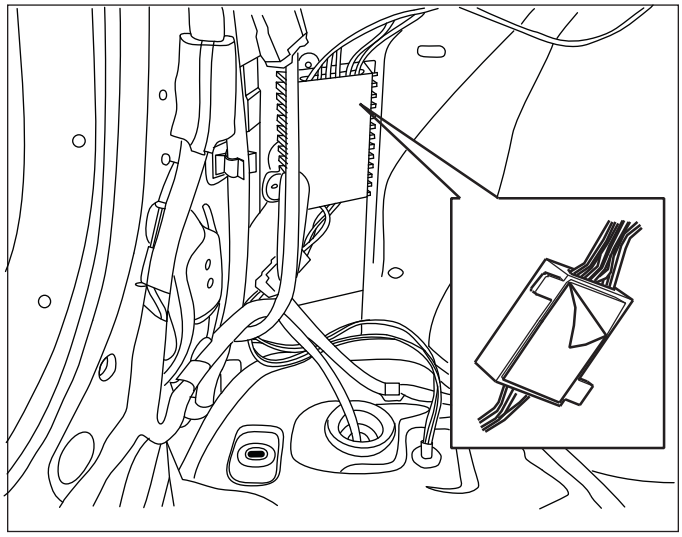

5 MOUNT GROUND WIRE

1. REMOVE THE EXISTING ILLUSTRATED BOLT USING A 10MM SOCKET.
2. ROUTE BLACK WIRE FROM THE MAIN HARNESS MODULE TO THE REMOVED BOLT LOCATION.
3. ATTACH THE BLACK WIRE TO THE VEHICLE USING THE SAME 10MM BOLT. TORQUE THE BOLT TO 5 FT LBS.

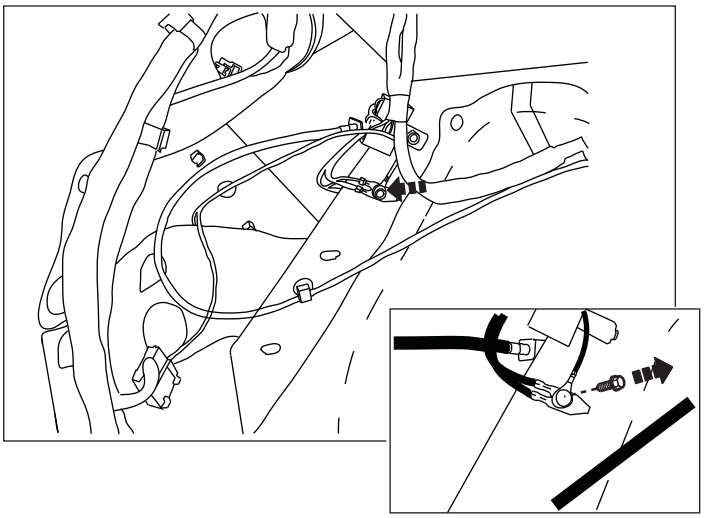

6 ACCESS VEHICLE HARNESS

1. LOCATE THE VEHICLE LIGHTING HARNESS CONNECTORS IN EACH REAR CORNER OF THE VEHICLE.
   NOTE: THERE ARE THREE CONNECTORS BEHIND EACH LIGHT ASSEMBLY, LOCATE THE 3-WAY AND 4-WAY CONNECTORS.
2. UNPLUG THESE FACTORY CONNECTORS FROM THE TAILLIGHT CONNECTORS.
3. USING A HOBBY KNIFE OR SEAM CUTTER, CAREFULLY SLIT OPEN THE OUTER HARNESS COVERING AROUND EACH CONNECTOR. DO NOT USE 2-WAY CONNECTOR.

CAUTION: TAKE CARE NOT TO CUT OR DAMAGE THE INSULATION OF THE WIRES WITHIN THE HARNESS.

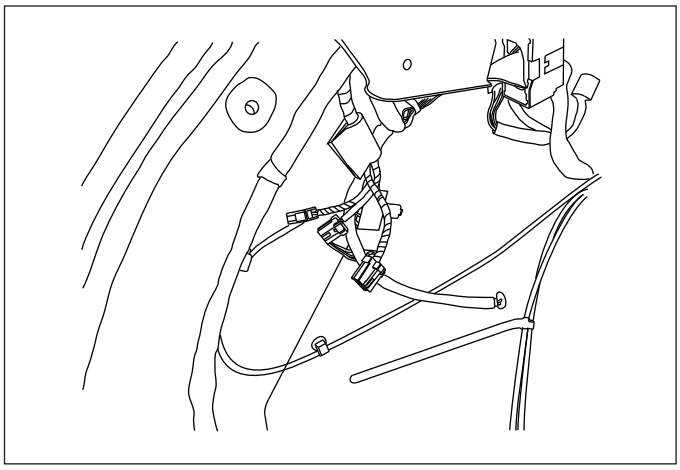

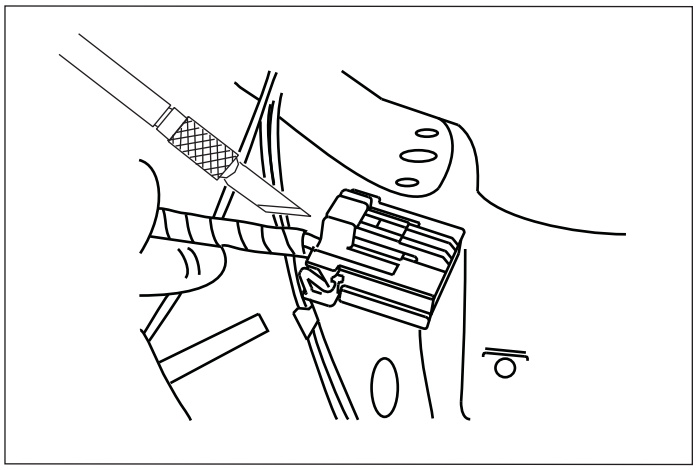

7 CONNECT WIRE TAPS TO VEHICLE HARNESS ON DRIVER'S SIDE

1. LOCATE AND IDENTIFY THE LEFT TAIL LIGHT, TURN SIGNAL, AND STOP WIRES BEHIND THE DRIVER SIDE LIGHT ASSEMBLY THAT WHERE EXPOSED DURING STEP 6.2.

VEHICLE HARNESS WIRE COLOR		CIRCUIT
PINK	(4-WAY CONNECTOR)	TAIL LIGHT
RED	(4-WAY CONNECTOR)	STOP
BLUE	(3-WAY CONNECTOR)	LEFT TURN

THE BLACK WIRES IN EACH CONNECTOR ARE THE GROUND CONNECTION, BE CAREFUL NOT TO DAMAGE THE INSULATION OF THESE WIRES.

2. ATTACH A RED WIRE TAP TO EACH OF THE INDICATED WIRES.
   A. PLACE WIRE INTO THE CENTER JAW OF THE WIRE TAP
   B. FOLD WIRE TAP AROUND WIRE.
   C. SQUEEZE TIGHTLY TOGETHER WITH PLIERS, MAKING A SECURE CONNECTION.

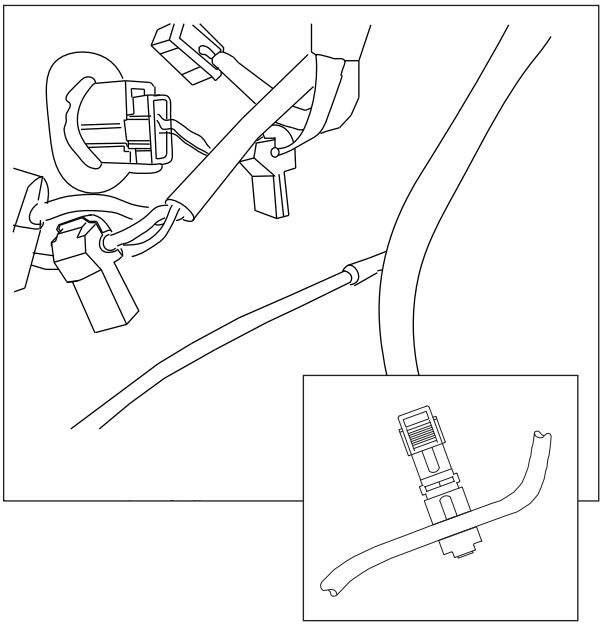

8 CONNECT HARNESS TO WIRE TAPS ON DRIVER'S SIDE

1. LOCATE AND IDENTIFY THE MAIN HARNESS SPADE TERMINALS AND CONNECT TO WIRE TAPS INSTALLED IN STEP 7.2 AS FOLLOWS:

VEHICLE HARNESS WIRE COLOR		MAIN HARNESS WIRE
PINK	(4-WAY CONNECTOR)	BROWN
RED	(4-WAY CONNECTOR)	BLUE/BLACK
BLUE	(3-WAY CONNECTOR)	YELLOW

NOTE: ENSURE THE SPADE TERMINALS ARE SECURELY SEATED INTO THE WIRE TAPS.

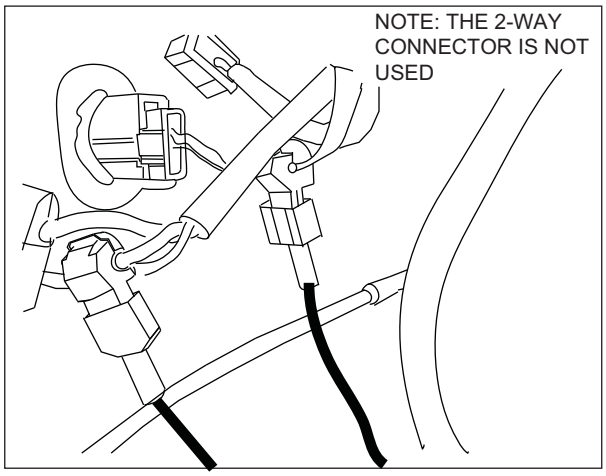

9 ROUTE GREEN WIRE TO PASSENGER SIDE OF VEHICLE

1. ROUTE THE MODULE'S GREEN WIRE ACROSS THE BACK OF THE VEHICLE TO THE PASSENGER SIDE VEHICLE WIRING HARNESS CONNECTORS, ON THE RIGHT HAND SIDE.
2. CUT THREE OF THE SUPPLIED FOAM TAPE STRIPS IN HALF. USING THE HALF STRIPS, SECURE THE GREEN WIRE TO THE CENTER OF THE BACK WALL OF THE VEHICLE.
3. ROUTE BEHIND THE PASSENGER SIDE PANEL TO THE ACCESS PANEL REMOVED IN STEP 3.6

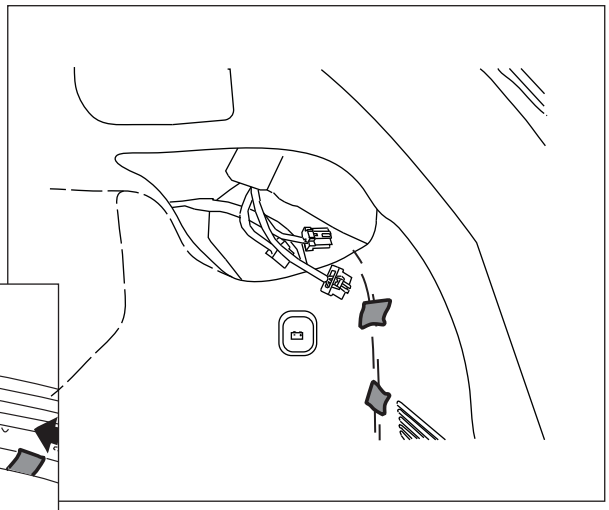

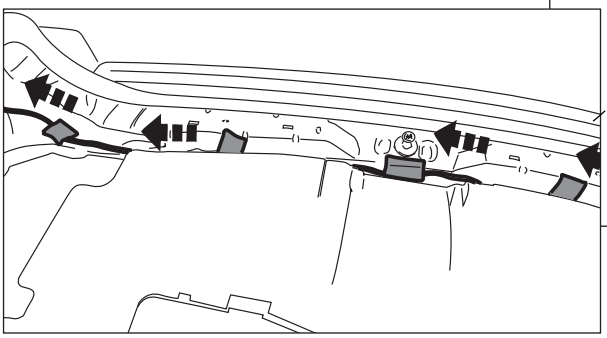

10 CONNECT WIRE TAPS TO VEHICLE HARNESS ON PASSENGER SIDE

1. LOCATE AND IDENTIFY THE TURN SIGNAL WIRE BEHIND THE PASSENGER SIDE LIGHT ASSEMBLY, EXPOSED DURING STEP 6.2.

VEHICLE HARNESS WIRE COLOR		CIRCUIT
BLUE	(3-WAY CONNECTOR)	RIGHT TURN

2. ATTACH A RED WIRE TAP TO EACH OF THE INDICATED WIRES.
   A. PLACE WIRE INTO THE CENTER JAW OF THE WIRE TAP
   B. FOLD WIRE TAP AROUND WIRE.
   C. SQUEEZE TIGHTLY TOGETHER WITH PIERS, MAKING A SECURE CONNECTION.

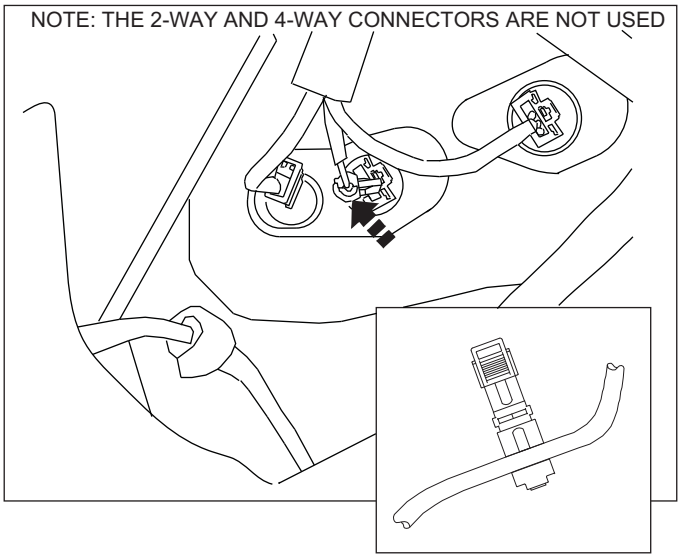

11 CONNECT HARNESS TO WIRE TAPS ON PASSENGER SIDE

1. LOCATE AND IDENTIFY THE MAIN HARNESS SPADE TERMINALS AND CONNECT TO WIRE TAPS INSTALLED IN STEP 10.2 AS FOLLOWS:

VEHICLE HARNESS WIRE COLOR		MAIN HARNESS WIRE
BLUE	(3-WAY CONNECTOR)	GREEN

NOTE: ENSURE THE SPADE TERMINALS ARE SECURELY SEATED INTO THE WIRE TAPS.

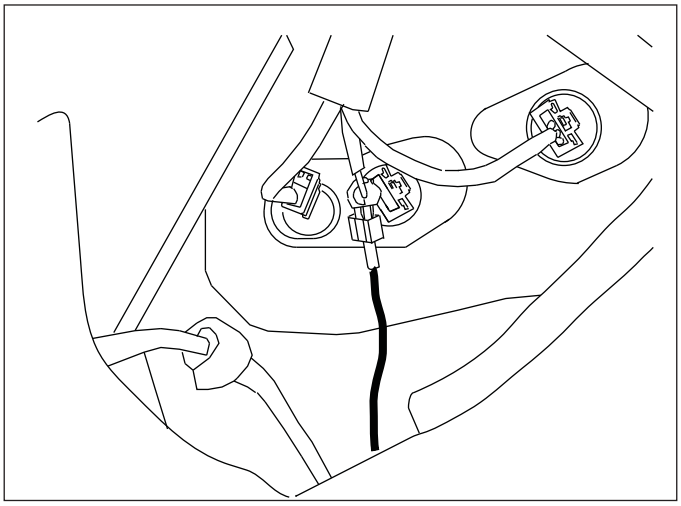

12 REMOVE PRIMARY LOCK ON REAR JUNCTION CONNECTOR

1. LOCATE AND IDENTIFY THE REAR JUNCTION CONNECTOR ON THE DRIVER SIDE BODY PANEL NEAR GROUND LOCATION. DISCONNECT THE CONNECTOR BY PUSHING DOWN ON THE THE BLACK PRIMARY LOCK AND TILTING BACK TO RELEASE.
2. REMOVE BLACK PRIMARY LOCK BY USING A PLASTIC PRY TOOL TO CAREFULLY PRY LOCK OFF THE CONNECTOR ON BOTH MATING SIDES.

NOTE: STEP 12.2 IS REQUIRED TO ACCESS SECONDARY LOCK.

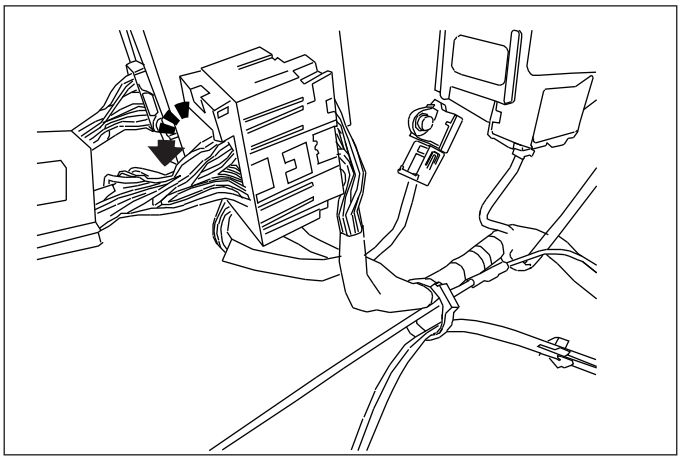

13 DISENGAGE SECONDARY LOCK ON REAR JUNCTION CONNECTOR

1. LOCATE AND IDENTIFY THE CONNECTOR WITHIN THE REAR JUNCTION THAT THE MAIN HARNESS POWER WIRE WILL BE INSERTED TO.
2. CAREFULLY USE A TERMINAL REMOVAL PICK TOOL TO DISENGAGE THE SECONDARY LOCK, BY PRYING AWAY FROM THE CONNECTOR.

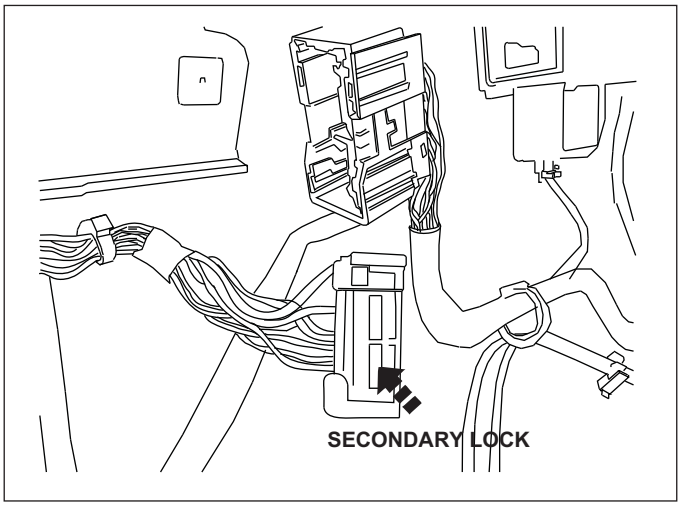

14 INSERT HARNESS TO REAR JUNCTION CONNECTOR

1. ROUTE THE RED POWER WIRE TO THE REAR JUNCTION CONNECTOR. LOCATE THE PROPER CAVITY TO BE POPULATED.
2. USING PLIERS GRIP THE WIRE DIRECTLY BEHIND THE TERMINAL AND FIRMLY INSERT INTO CONNECTOR.
3. SQUEEZE SECONDARY LOCK INTO PLACE.

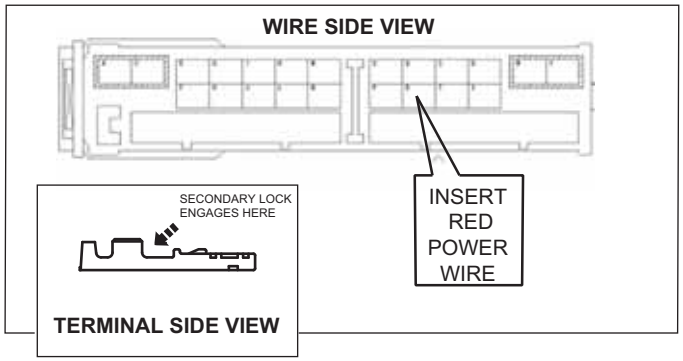

15 REASSEMBLE REAR JUNCTION CONNECTOR

1. VISUALLY CHECK TO CONFIRM THE SECONDARY LOCK HAS RE-ENGAGED.
2. PLACE BLACK PRIMARY LOCK BACK ON CONNECTOR.
3. INSERT CONNECTOR BACK INTO THE MATING CONNECTOR AND SECURE IN PLACE WITH BLACK PRIMARY LOCK.

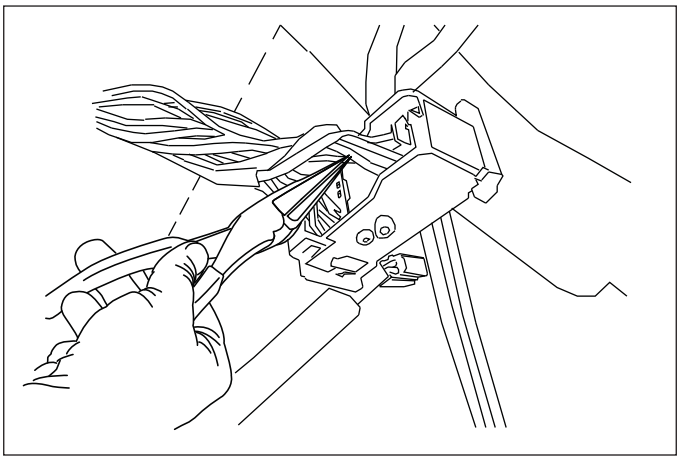

16 SECURE ALL MODULE WIRES IN PLACE.

1. SECURE THE TAIL, LEFT TURN, STOP, AND POWER WIRES IN PLACE WITH TWO OF THE SUPPLIED FOAM TAPE STRIPS.

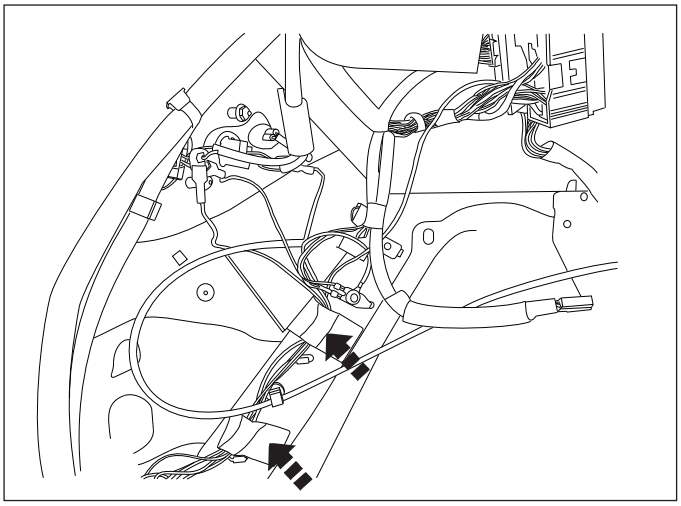

17 ROUTE 4-FLAT MOLD FROM HITCH TO INTERIOR OF VEHICLE.

1. SECURE THE 4-FLAT TRAILER CONNECTOR INTO THE HITCH BRACKET AS ILLUSTRATED.
2. ROUTE THE 4-FLAT TRAILER CONNECTOR UNDER THE VEHICLE. USE THE TWO 15” TIE WRAPS TO SECURE THE HARNESS TO THE CROSS MEMBER OF THE HITCH. USE TWO 6” TIE WRAPS TO SECURE TO DRIVER SIDE AT MOUNTING HOLES AS ILLUSTRATED.
3. REMOVE AND DISPOSE OF THE EXISTING CAVITY PLUG FROM THE FLOOR OF THE VEHICLE.
4. ROUTE THE FOUR TERMINATED WIRES THROUGH THE EXPOSED OPENING. USE CARE TO PREVENT ANY DAMAGE BEING DONE TO THE WIRES.
5. SLIDE THE SUPPLIED GROMMET OVER THE TERMINATED WIRES AND SEAT THE GROMMET INTO THE VEHICLE VEHICLE OPENING. THE CONDUIT ON THE 4-FLAT WIRING HARNESS SHOULD REACH THE GROMMET.
6. SEAL THE REPLACEMENT GROMMET WITH SILICON TO PREVENT ANY POSSIBLE WATER INTRUSION.

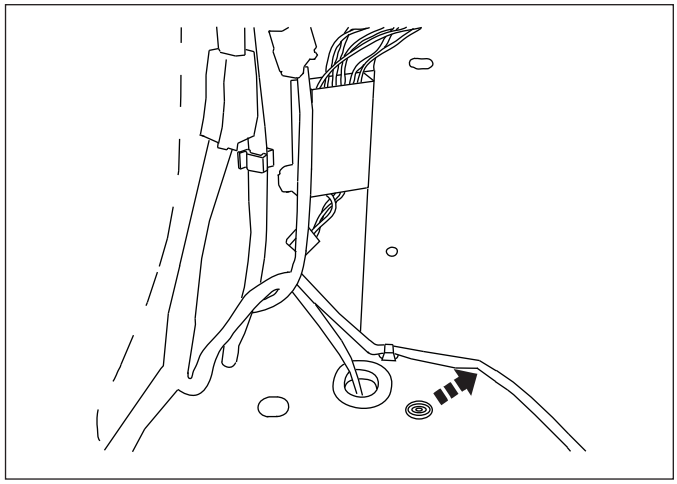

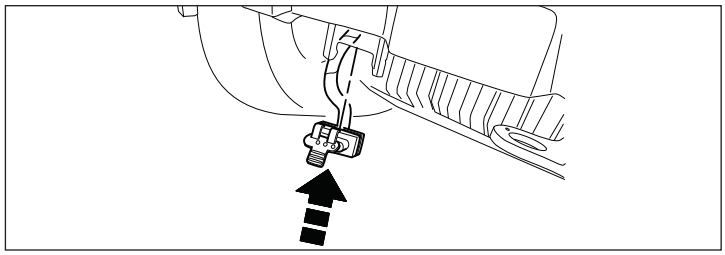

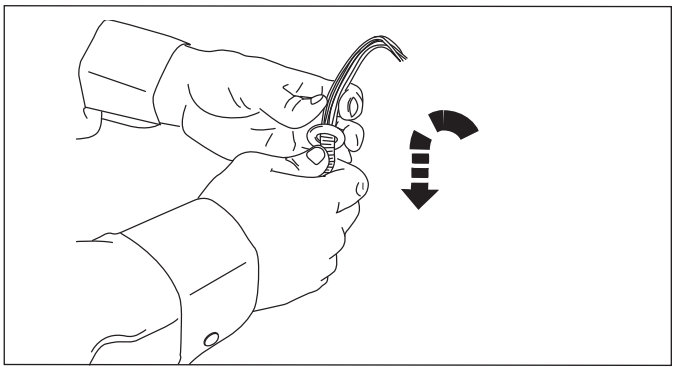

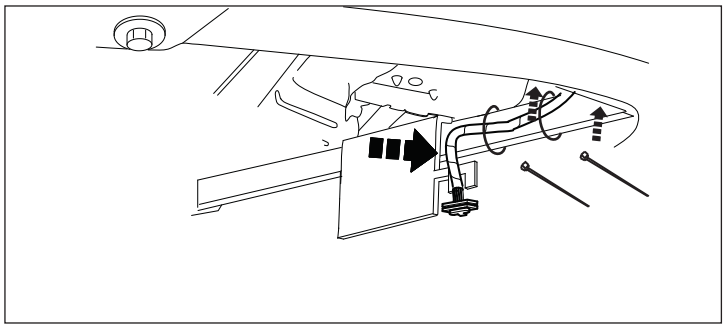

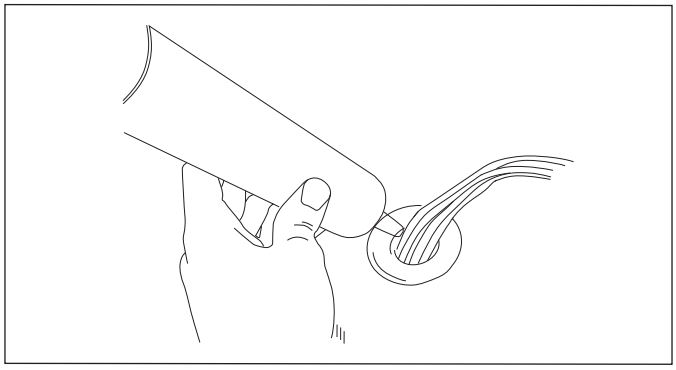

18 ATTACH CONNECTOR TO 4-FLAT HARNESS AND CONNECT TO MODULE

1. INSERT THE PROVIDED FEMALE CONNECTOR WITH THE FOUR TERMINATED 4-FLAT WIRES. INSERT AS ILLUSTRATED.
2. FIRMLY PUSH TERMINAL LOCK INTO THE LOCKED POSITION.
3. ATTACH THE 4-FLAT HARNESS CONNECTOR TO THE MODULE CONNECTOR. THE WIRES SHOULD MATCH COLOR TO COLOR AT THE CONNECTORS. REFERENCE ILLUSTRATION ON PAGE 9.
4. USE ONE PIECE OF FOAM TAPE TO SECURE CONNECTORS TO SHEET METAL TO PREVENT RATTLE.
5. USE TWO 6” TIE WRAPS TO SECURE 4-FLAT MAIN HARNESS TO EXISTING FACTORY WIRING HARNESS.

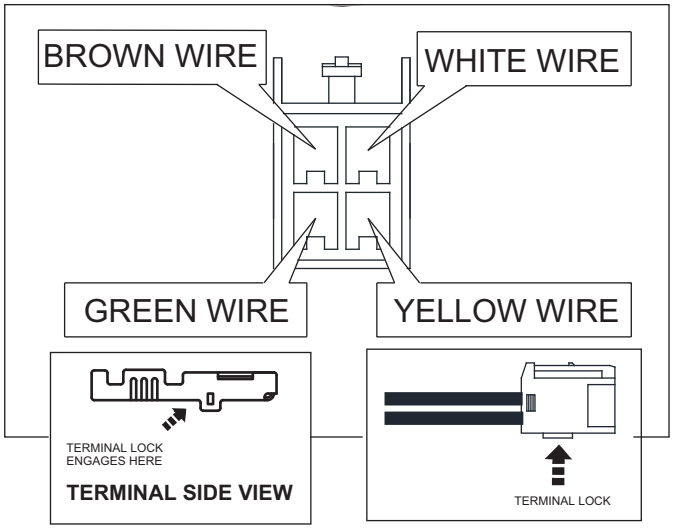

19 ROUTE JUMPER HARNESS FROM BATTERY TO POWER DISTRIBUTION BOX

1. REMOVE POSITVE BATTERY CAP.
2. USING A 10MM SOCKET WRENCH ATTACH THE RING TERMINAL ON THE JUMPER HARNESS TO THE POSITIVE STUD.
3. ROUTE JUMPER HARNESS ALONG EXISTING HARNESS NEAR POWER DISTRIBUTION BOX. AS ILLISTRATED.
4. REMOVE POWER DISTRIBUTION BOX COVER AND LOCATE THE INDICATED CONNECTOR.
5. DISENGAGE THE CONNECTOR LOCK AND RELEASE FROM CAVITY.

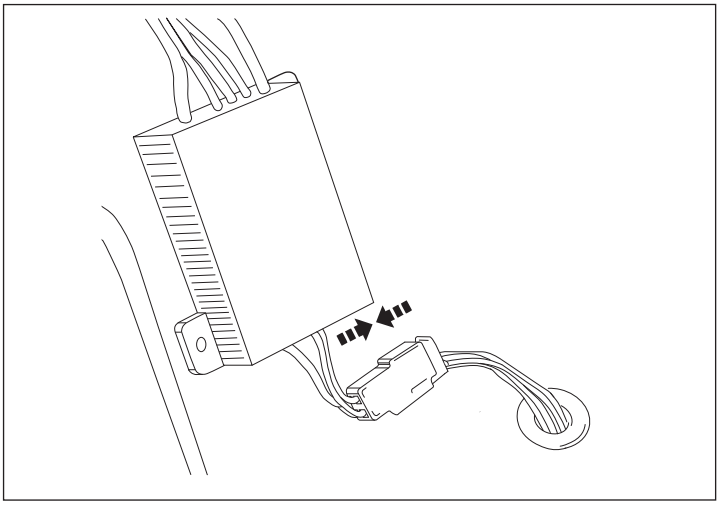

20 CONNECT JUMPER HARNESS TO POWER DISTRIBUTION

1. LOCATE THE SECONDARY LOCK ON THE CONNECTOR.
2. CAREFULLY USE A TERMINAL REMOVAL PICK TOOL TO DISENGAGE THE SECONDARY LOCK, BY PRYING AWAY FROM THE CONNECTOR.
3. LOCATE THE PROPER CAVITY TO BE POPULATED.
4. USING PLIERS GRIP THE WIRE DIRECTLY BEHIND THE TERMINALS AND FIRMLY INSERT INTO CONNECTOR.
5. REENGAGE SECONDARY LOCK INTO POSITON.
6. INSERT CONNECTOR BACK INTO DISTRIBUTION BOX CAVITY.
7. SECURE JUMPER HARNESS IN PLACE WITH FOUR 6” TIE WRAPS. (PROVIDED)

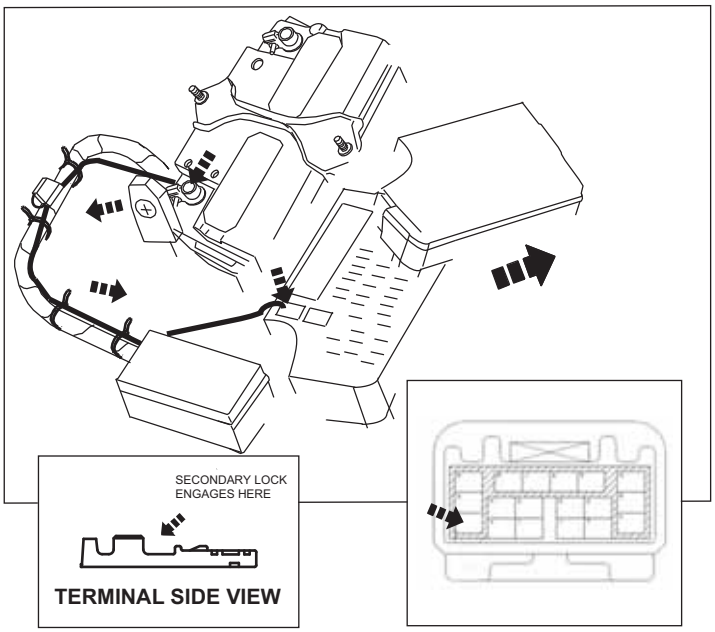

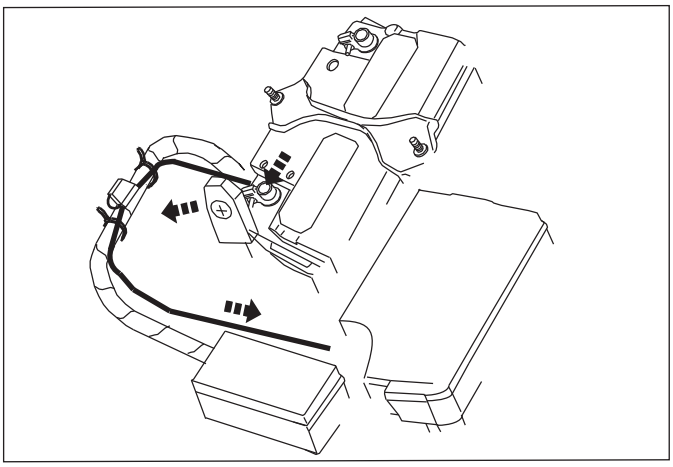

21 CONFIRM CORRECT OPERATION

1. ENSURE ALL CONNECTIONS ARE COMPLETE.
2. USE A 12V TEST LIGHT TO CHECK EACH SIGNAL FUNCTION.
   A. ATTACH THE GROUND LEAD TO THE MALE TRAILER CONNECTOR PIN.
   B. VERIFY TAIL LIGHT CIRCUIT, RIGHT TURN/BRAKE AND LEFT TURN/BRAKE BY ACTIVATING EACH FUNCTION ON THE VEHICLE INDIVIDUALLY USING THE APPROPRIATE TERMINAL ON THE TRAILER CONNECTOR.

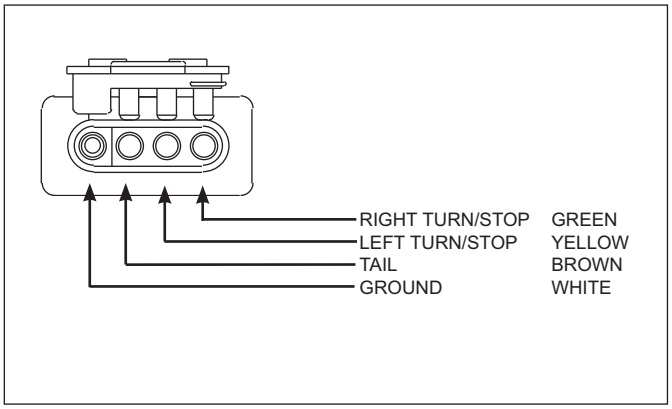

22 REINSTALL ALL TRIM, TIE DOWN AND INTERIOR PANELS

1. BUNDLE THE REMAINING WIRE FROM THE JUMPER HARNESS BEHIND THE TRIM PANEL USING A TIE WRAP.
   NOTE: DO NOT TIE OFF ON THE DRAIN TUBE, SECURE TO VEHICLE.
2. REINSTALL ALL TRIM IN THE REVERSE ORDER OF THE REMOVAL, ENSURING ALL FASTENER ARE PROPERLY INSTALLED.
3. CLEAN VEHICLE.
4. VACUUM AND CLEAN ANY DEBRIS CAUSED BY INSTALLATION.

TROUBLESHOOTING GUIDE

PART NUMBER:
0000-8E-R04

TRAILER HITCH WIRING KIT

APPLICABLE MODELS:
2012 > CX-5

TOOLS REQUIRED

TEST LIGHT

METHOD

1. Attach the test light ground connection to the male pin of the harness's 4-flat connector.
2. Probe each of the female pins individually to confirm correct circuit operation.

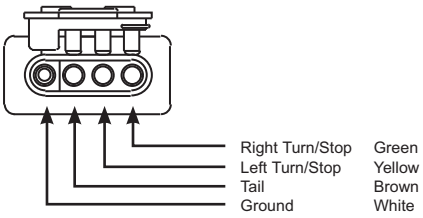

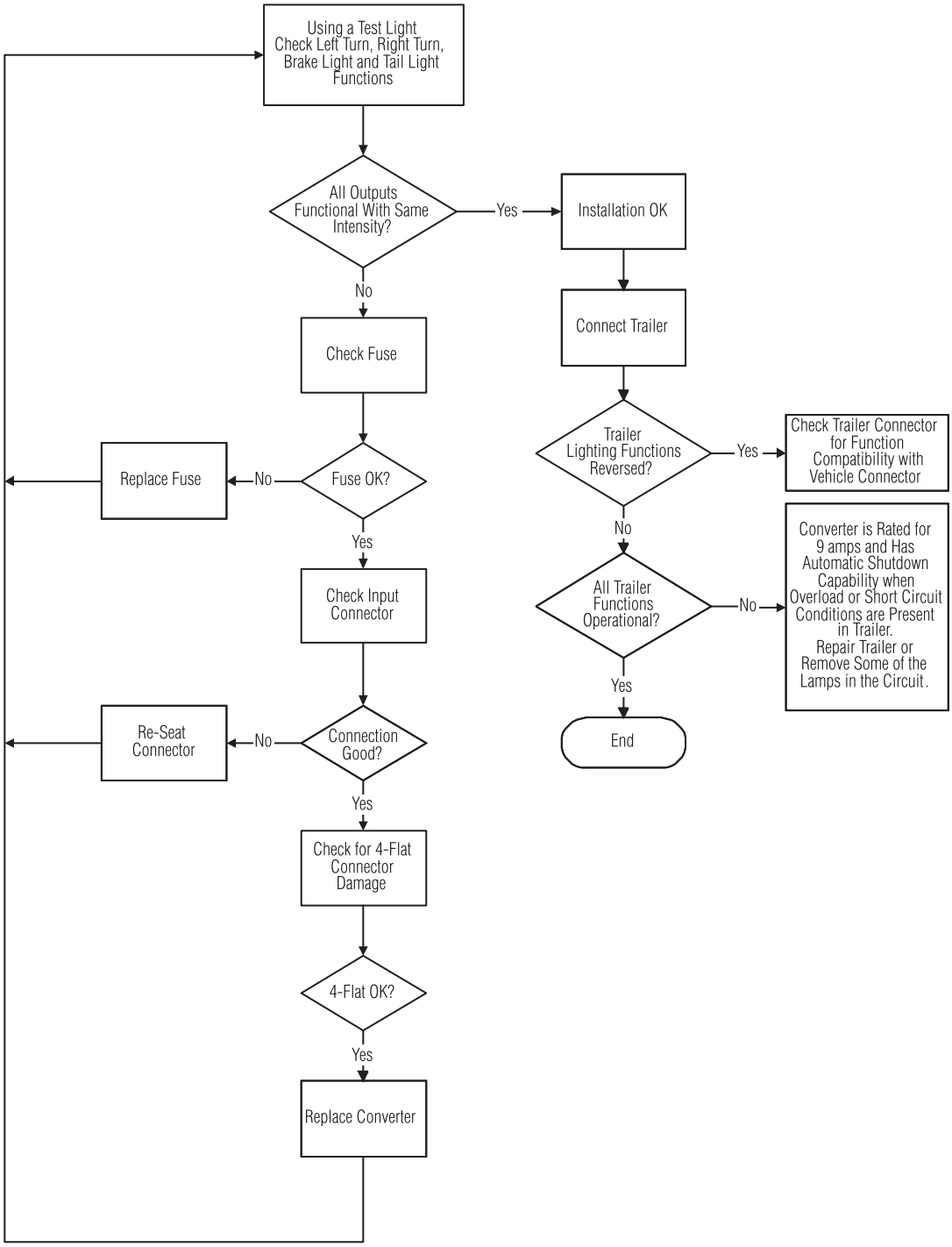

INSTALLATION INSPECTION

PART NUMBER:
0000-8E-R04

TRAILER HITCH WIRING KIT

APPLICABLE MODELS:
2012 > CX-5

Inspect the installed / reinstalled parts for the following items:

	Inspection Items •			
Inspection Parts	Clearance/Fit	Scratches/Dirt/ Harness Interference	Instalation/ Tightning/ Engagement	Operation Check
Tow Harness Functions				•
Tow Harness	•	•	•	
Tow Harness Module Ground Screw			•	
Driver's Side Left Rear Interior Trim Panel	•	•	•	
Passenger Side Right Rear Interior Trim Panel	•	•	•	
Rear Threshold Plate	•	•	•	
Rear Foam Inserts	•	•	•	
Rear Floor Covering	•	•	•	
Vehicle 12 v+ Power Lug			•	
Vehicle Negative Power Cable			•	
Tow Harness Module 10 Amp Fuse			•	

Notes:

1. Verify signal functionality at the trailer harness plug using the test procedure on page 9.
2. Ensure tow harness module ground bolt is torqued to 5 ft. lbs.
3. Ensure vehicle 12v (+) power lug is torqued to 5 ft. lbs.
4. Ensure the 10 amp fuse supplied with the tow harness is used. Do not use a fuse rated greater than 10 amp.

CAUTION

When the battery is disconnected, the DSC may stop operating.

(The DSC OFF indicator will flash at this time, and the TCS/DSC operation indicator will illuminate.)

1. Turn the ignition switch to "OFF" and then turn it back to "ON".
2. Turn the steering wheel clockwise as far as it will go, and then turn it back counterclockwise as far as it will go.
3. Check that the TCS/DSC operation indicator is turned off.
4. Turn the ignition switch to "OFF" and then turn it back to "ON".
5. Check that the TCS/DSC operation indicator is turned off. If the TCS/DSC operation indicator is still illuminated or the DSC indicator is not turned off when the ignition switch is turned back to "ON", contact your Mazda dealer.

CAUTION

If the battery is disconnected, the power windows may no longer fully open or fully close automatically.

1. Turn the ignition key to the “ON” position.
2. Press the power window switch to fully open the power windows.
3. Lift up the power window switch to fully close the power windows, and keep it pulled up for approximately 2 seconds.
4. Position the engine switch at “OFF”, and then at “ON” again. When the function doesn’t work after these procedures, please contact your Mazda dealer.

CAUTION

If the battery is disconnected, the TPMS (Tire Pressure Monitoring System) initial setting is reset and the system may not operate normally.

1. Adjust the tire pressure (verify tire pressure using label on body side with driver’s door open).
2. Turn the ignition switch to the “ON” position.
3. Press the TPMS (SET) switch (long-press it until TPMS warning light in meter flashes two times and a beep sounds one time).
4. Turn the ignition switch to “OFF”.
5. If the TPMS warning light illuminates or flashes even though the above procedure has been performed, contact an Authorized Mazda Dealer.

Date					
Vehicle					
VIN					
Approved		Checked		Person In Charge	