Pagoda PL 33*

TYPE:

PROJECT NAME:

Pagoda PL 33*

TYPE: Ceiling Lights

DESCRIPTION:

Part of a collection of bright blown glass modular lamps made with a technique of shade from crystal to a semi-transparent pastel color. Metal parts are white for wall lamps and white/satin nickel for suspended lamps.

LAMP TYPE: E27 incandescent

VoltageWattage: 120V 1 X 150W

LISTING: ETL, CUL
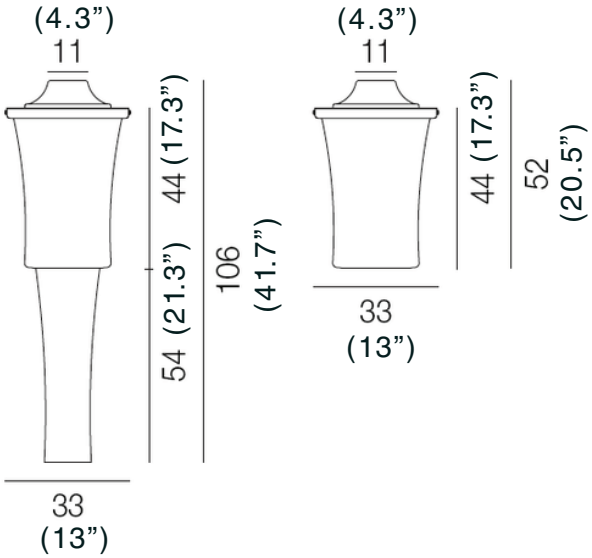
Pagoda PL 33* Dimensions