Fantech

HP SERIES

FANS FOR RADON APPLICATIONS
WITH IMPROVED UV RESISTANCE!

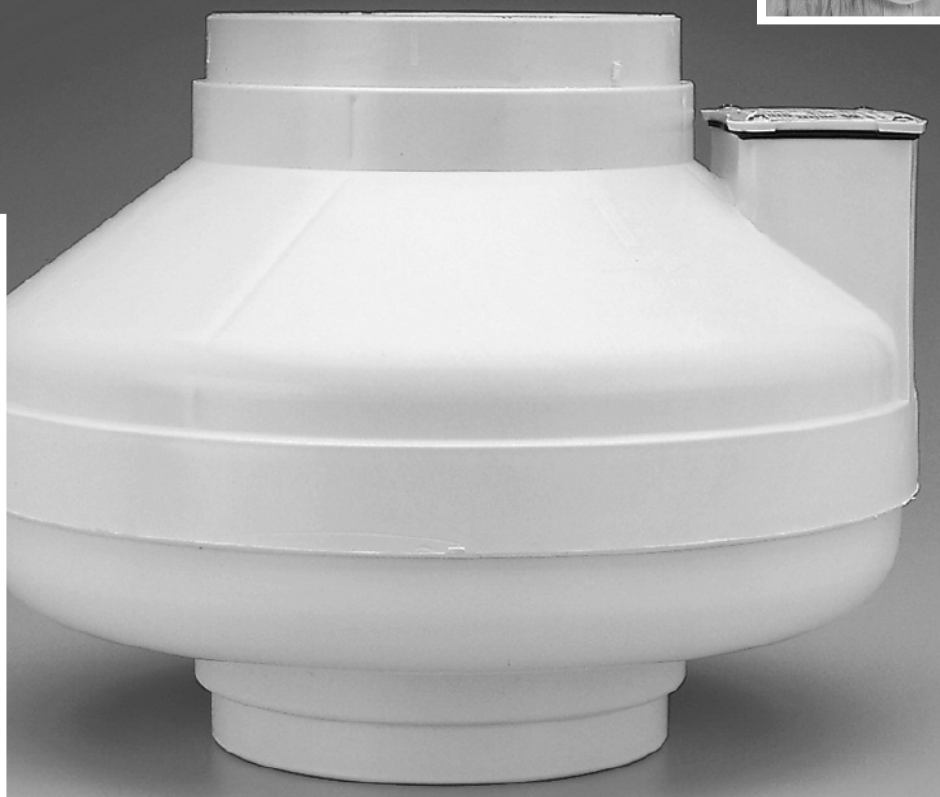

TRUST THE INDUSTRY STANDARD.
HERE'S WHY:

Don't put your reputation at stake by installing a fan you know won't perform like a Fantech! For nearly twenty years, Fantech has manufactured quality ventilation equipment for Radon applications. Fantech is the fan Radon contractors have turned to in over 1,000,000 successful Radon installations worldwide.

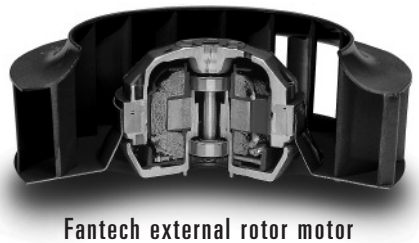

Fantech external rotor motor

FANTECH HP SERIES FANS MEET THE CHALLENGES OF RADON APPLICATIONS:

HOUSING
- UV resistant, UL Listed durable plastic
- UL Listed for use in commercial applications
- Factory sealed to prevent leakage
- Watertight electrical terminal box
- Approved for mounting in wet locations - i.e. Outdoors

MOTOR
- Totally enclosed for protection
- High efficiency EBM motorized impeller
- Automatic reset thermal overload protection
- Average life expectancy of 7-10 years under continuous load conditions

RELIABILITY
- Five Year Full Factory Warranty
- Over 1,000,000 successful radon installations worldwide

IMPROVING INDOOR AIR QUALITY THROUGH BETTER VENTILATION

www.fantech.net

Fantech

HP Series Fans are Specially Designed with Higher Pressure Capabilities for Radon Mitigation Applications

MOST RADON MITIGATORS WHO PREVIOUSLY USED THE FANTECH FR SERIES FANS HAVE SWITCHED TO THE NEW HP SERIES.

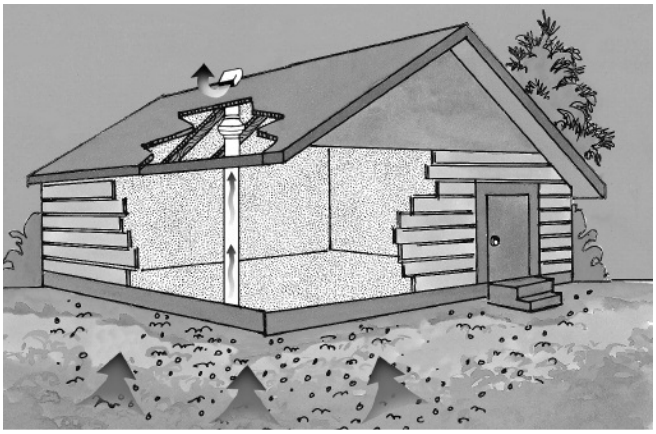

PERFORMANCE DATA

Fan Model	Volts	Wattage Range	Max. Amps	CFM vs. Static Pressure in Inches W.G.								Max. Ps
				0"	0.5"	0.75"	1.0"	1.25"	1.5"	1.75"	2.0"	
HP2133	115	14 - 20	0.17	134	68	19	-	-	-	-	-	0.84
HP2190	115	60 - 85	0.78	163	126	104	81	58	35	15	-	1.93
HP175	115	44 - 65	0.57	151	112	91	70	40	12	-	-	1.66
HP190	115	60 - 85	0.78	157	123	106	89	67	45	18	1	2.01
HP220	115	85 - 152	1.30	344	260	226	193	166	137	102	58	2.46

HVI MEMBER™

PERFORMANCE CURVES

Fantech provides you with independently tested performance specifications.

The performance curves shown in this brochure are representative of the actual test results recorded at Texas Engineering Experiment Station/Energy Systems Lab, a recognized testing authority for HVI. Testing was done in accordance with AMCA Standard 210-85 and HVI 916 Test Procedures. Performance graphs show air flow vs. static pressure.

Use of HP Series fans in low resistance applications such as bathroom venting will result in elevated sound levels. We suggest FR Series or other Fantech fans for such applications.

HP FEATURES INCLUDE

- Improved UV resistant housings approved for commercial applications.
- UL Approved for Wet Locations (Outdoors)
- Sealed housings and wiring boxes to prevent Radon leakage or water penetration
- Energy efficient permanent split capacitor motors
- External wiring box
- Full Five Year Factory Warranty

c UL us

NOTE:

Installations that will result in condensate forming in the outlet ducting should have a condensate bypass installed to route the condensate outside of the fan housing. Conditions that are likely to produce condensate include but are not limited to: outdoor installations in cold climates, long lengths of outlet ducting, high moisture content in soil and thin wall or aluminum outlet ducting. Failure to install a proper condensate bypass may void any warranty claims.

HP2133 & HP2190 RADON MITIGATION FANS

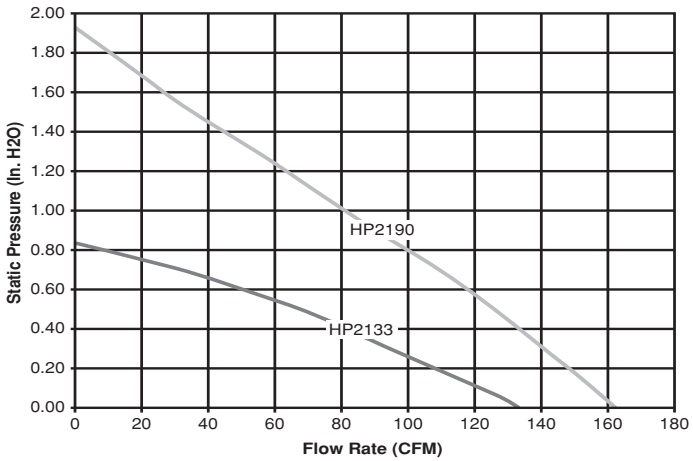

Tested with 4" ID duct and standard couplings.

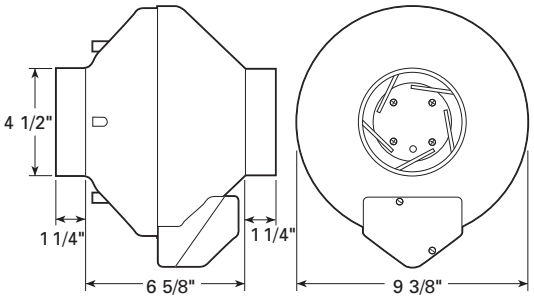

HP2133 – For applications where lower pressure and flow are needed. Record low power consumption of 14-20 watts! Often used where there is good sub slab communication and lower Radon levels.

HP2190 – Performance like the HP190 but in a smaller housing. Performance suitable for the majority of installations.

Fans are attached to PVC pipe using flexible couplings.
For 4" PVC pipe use Indiana Seals #156-44, Pipeconx PCX 56-44 or equivalent.
For 3" PVC pipe use Indiana Seals #156-43, Pipeconx PCX 56-43 or equivalent.

HP175 & HP190 RADON MITIGATION FANS

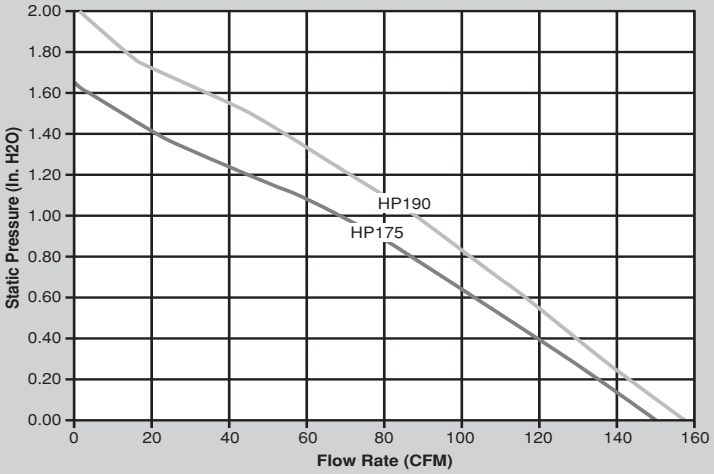

Tested with 4" ID duct and standard couplings.

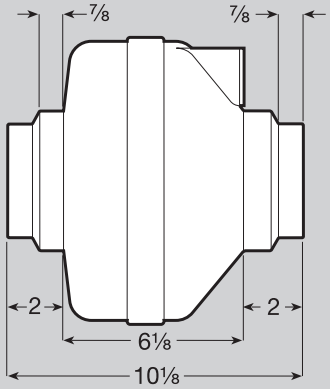

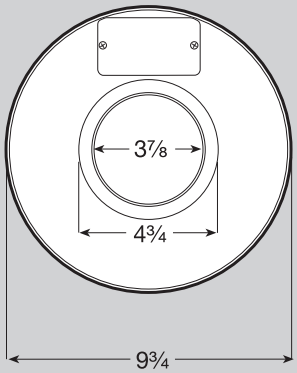

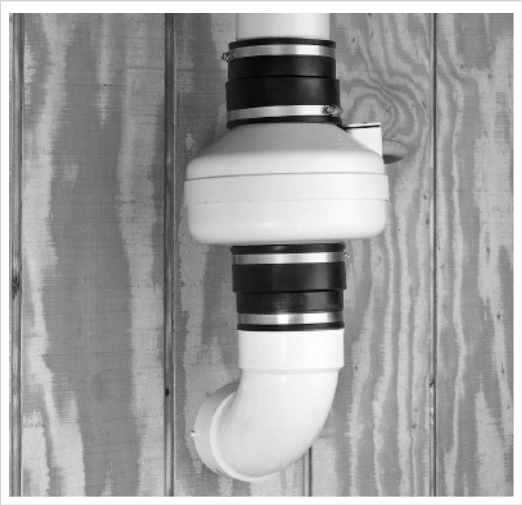

HP175 – The economical choice where slightly less air flow is needed. Often used where there is good sub slab communication and lower Radon levels.

HP190 – The standard for Radon Mitigation. Ideally tailored performance curve for a vast majority of your mitigations.

Fans are attached to PVC pipe using flexible couplings.
For 4" PVC pipe use Indiana Seals #151-44, Pipeconx PCX 51-44 or equivalent.
For 3" PVC pipe use Indiana Seals #156-43, Pipeconx PCX 56-43 or equivalent.

HP220 RADON MITIGATION FAN

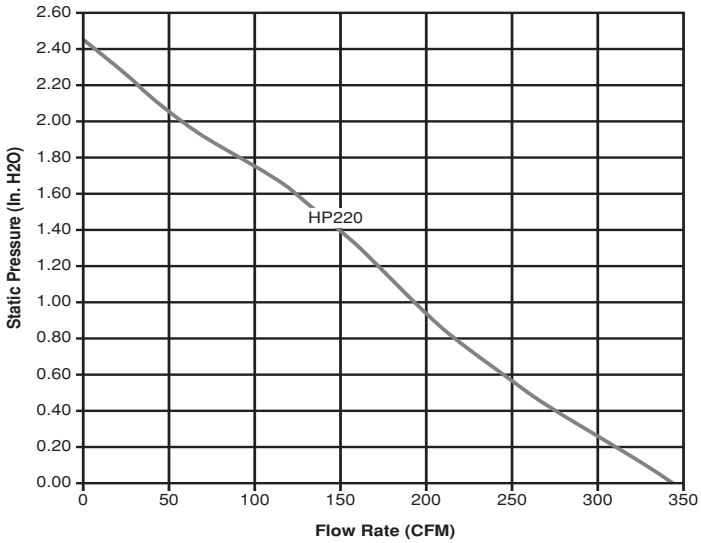

Tested with 6" ID duct and standard couplings.

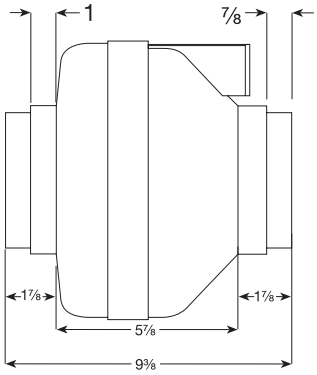

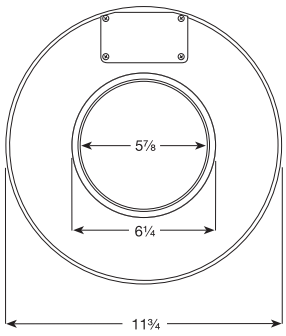

HP 220 – Excellent choice for systems with elevated radon levels, poor communication, multiple suction points and large subslab footprint. Replaces FR 175.

Fans are attached to PVC pipe using flexible couplings.
For 4" PVC pipe use Indiana Seals #156-64, Pipeconx PCX 56-64 or equivalent.
For 3" PVC pipe use Indiana Seals #156-63, Pipeconx PCX 56-63 or equivalent.

Fantech

FR SERIES

THE ORIGINAL MITIGATOR

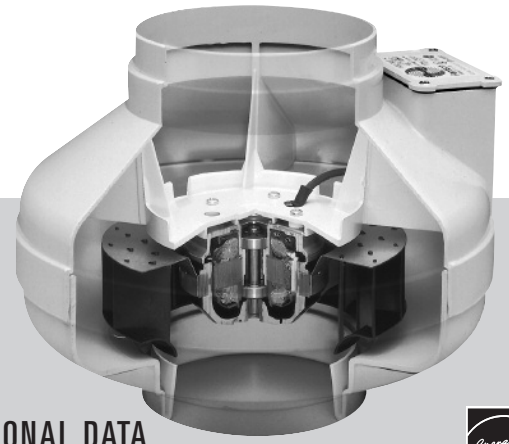

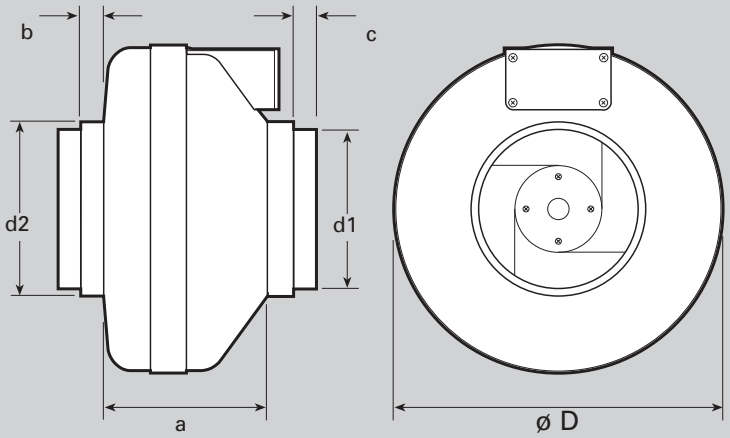

DIMENSIONAL DATA

model	øD	d1	d2	a	b	c
FR100	9 1/2	3 7/8	4 7/8	6 1/8	7/8	7/8
FR110	9 1/2	3 7/8	4 7/8	6 1/8	7/8	7/8
FR125	9 1/2	–	4 7/8	6 1/8	7/8	–
FR140	11 3/4	5 7/8	6 1/4	5 7/8	1	7/8
FR150	11 3/4	5 7/8	6 1/4	5 7/8	1	7/8
FR160	11 3/4	5 7/8	6 1/4	6 3/8	1	7/8
FR200	13 1/4	7 7/8	9 7/8	6 1/4	1 1/2	1 1/2
FR225	13 1/4	7 7/8	9 7/8	6 1/4	1 1/2	1 1/2
FR250	13 1/4	–	9 7/8	6 1/4	–	1 1/2

All dimensions in inches

PERFORMANCE DATA

Fan Model	Energy Star	RPM	Volts	Rated Watts	Wattage Range	Max. Amps	CFM vs. Static Pressure in Inches W.G.							Max. Ps	Duct Dia.
							0"	.2"	.4"	.6"	.8"	1.0"	1.5"		
FR100	✓	2950	120	21.2	13 - 22	0.18	137	110	83	60	21	-	-	0.90"	4"
FR125	✓	2950	115	18	15 - 18	0.18	148	120	88	47	-	-	-	0.79"	5"
FR150	✓	2750	120	71	54 - 72	0.67	263	230	198	167	136	106	17	1.58"	6"
FR160	-	2750	115	129	103 - 130	1.14	289	260	233	206	179	154	89	2.32"	6"
FR200	✓	2750	115	122	106 - 128	1.11	408	360	308	259	213	173	72	2.14"	8"
FR225	✓	3100	115	137	111 - 152	1.35	429	400	366	332	297	260	168	2.48"	8"
FR250*	-	2850	115	241	146 - 248	2.40	649	600	553	506	454	403	294	2.58"	10"

FR Series performance is shown with ducted outlet. Per HVI's Certified Ratings Program, charted air flow performance has been derated by a factor based on actual test results and the certified rate at .2 inches WG.
** Also available with 8" duct connection. Model FR 250-8. Special Order.*

NOTE:

Installations that will result in condensate forming in the outlet ducting should have a condensate bypass installed to route the condensate outside of the fan housing. Conditions that are likely to produce condensate include but are not limited to: outdoor installations in cold climates, long lengths of outlet ducting, high moisture content in soil and thin wall or aluminum outlet ducting. Failure to install a proper condensate bypass may void any warranty claims.

FIVE YEAR WARRANTY

DURING ENTIRE WARRANTY PERIOD:

FANTECH will replace any fan which has a factory defect in workmanship or material. Product may need to be returned to the Fantech factory, together with a copy of the bill of sale and identified with RMA number.

FOR FACTORY RETURN YOU MUST:

- Have a Return Materials Authorization (RMA) number. This may be obtained by calling FANTECH either in the USA at 1.800.747.1762 or in CANADA at 1.800.565.3548. Please have bill of sale available.
- The RMA number must be clearly written on the outside of the carton, or the carton will be refused.
- All parts and/or product will be repaired/replaced and shipped back to buyer; no credit will be issued.

OR

The Distributor may place an order for the warranty fan and is invoiced.
The Distributor will receive a credit equal to the invoice only after product is returned prepaid and verified to be defective.

FANTECH WARRANTY TERMS DO NOT PROVIDE FOR REPLACEMENT WITHOUT CHARGE PRIOR TO INSPECTION FOR A DEFECT. REPLACEMENTS ISSUED IN ADVANCE OF DEFECT INSPECTION ARE INVOICED, AND CREDIT IS PENDING INSPECTION OF RETURNED MATERIAL. DEFECTIVE MATERIAL RETURNED BY END USERS SHOULD NOT BE REPLACED BY THE DISTRIBUTOR WITHOUT CHARGE TO THE END USER, AS CREDIT TO DISTRIBUTOR'S ACCOUNT WILL BE PENDING INSPECTION AND VERIFICATION OF ACTUAL DEFECT BY FANTECH.

THE FOLLOWING WARRANTIES DO NOT APPLY:

- Damages from shipping, either concealed or visible. Claim must be filed with freight company.
- Damages resulting from improper wiring or installation.
- Damages or failure caused by acts of God, or resulting from improper consumer procedures, such as:

1. Improper maintenance
2. Misuse, abuse, abnormal use, or accident, and
3. Incorrect electrical voltage or current.

- Removal or any alteration made on the FANTECH label control number or date of manufacture.
- Any other warranty, expressed, implied or written, and to any consequential or incidental damages, loss or property, revenues, or profit, or costs of removal, installation or reinstallation, for any breach of warranty.

WARRANTY VALIDATION

- The user must keep a copy of the bill of sale to verify purchase date.
- These warranties give you specific legal rights, and are subject to an applicable consumer protection legislation. You may have additional rights which vary from state to state.

DISTRIBUTED BY:

Fantech
United States 10048 Industrial Blvd. • Lenexa, KS 66215 • 1.800.747.1762 • www.fantech.net
Canada 50 Kanalflakt Way • Bouctouche, NB E4S 3M5 • 1.800.565.3548 • www.fantech.net

Item #: 411741
Rev Date: 021010

Fantech, reserves the right to modify, at any time and without notice, any or all of its products' features, designs, components and specifications to maintain their technological leadership position.