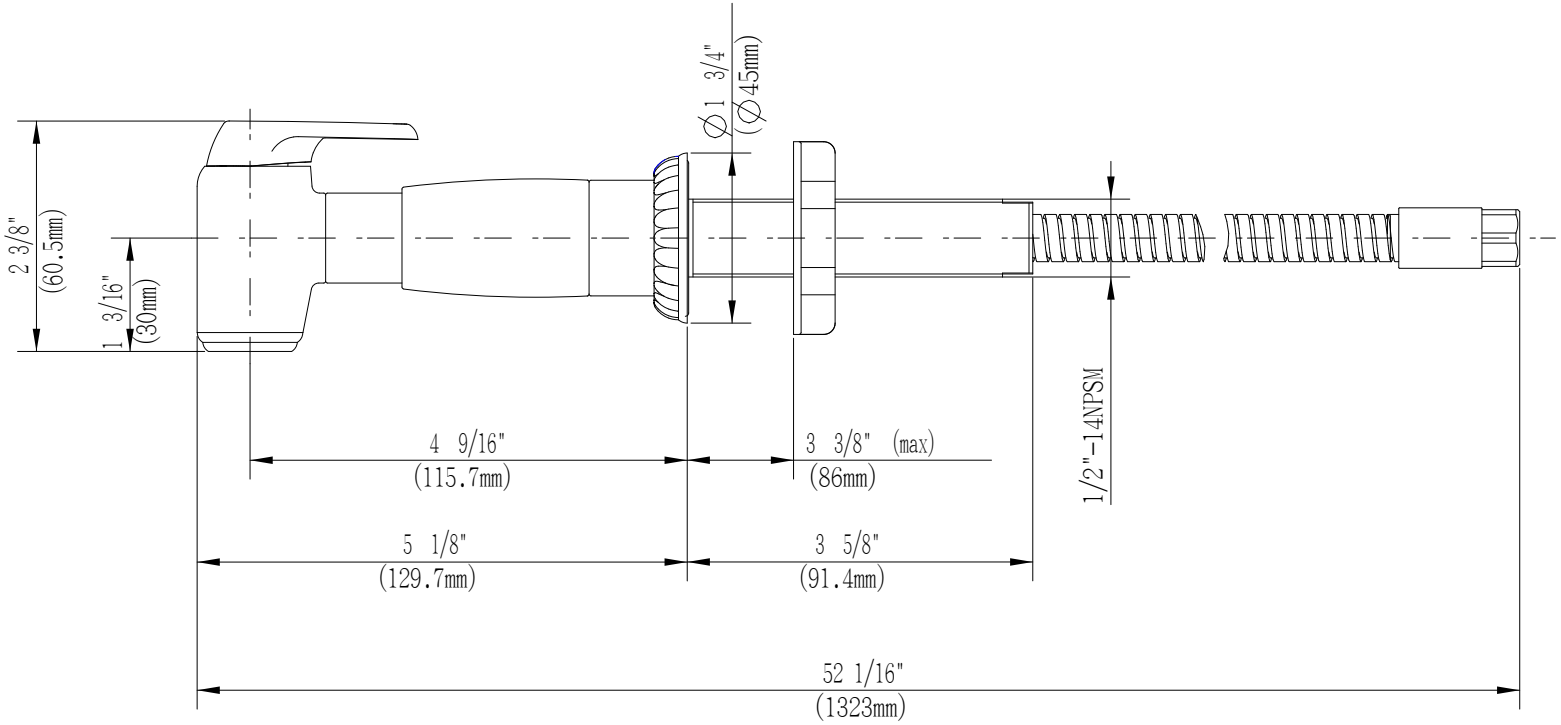

ZONE	DESCRIPTION	BY	DATE	APPROVE
	Ceramic disc Valve Cartridges as Standard			
	Providing a flow rate of (1.9LPM) min at 20psi			

REVISIONS

REVIEWED

CHECKED

DESIGN Dan Kennard DATE 2005.10.12(三)

UNIT mm

FUSION HARDWARE GROUP.

TITLE: Kitchen Sprayer

ITEM SFPALSPR

REV A

SCALE

MATERIAL

SIZE A4 SHEET 1 OF 1