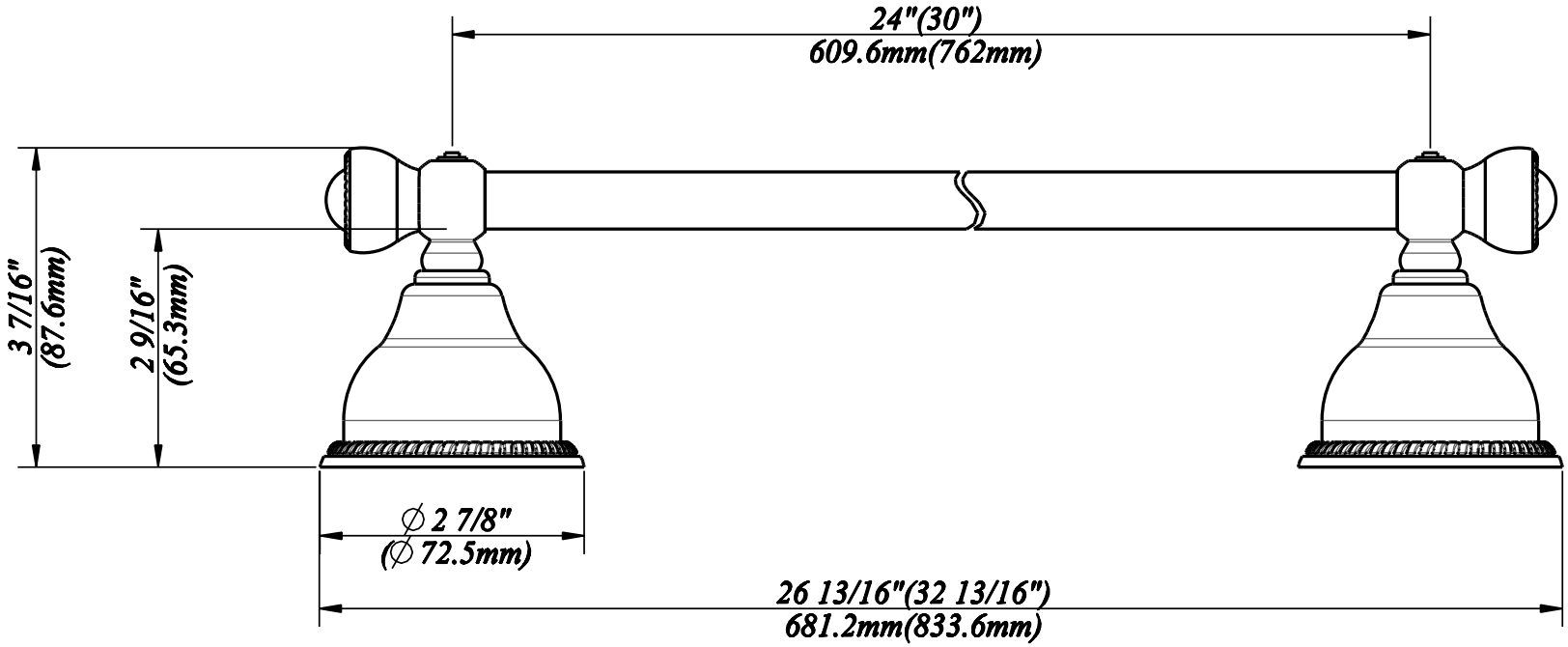

ZONE	DESCRIPTION	BY	DATE	APPROVE

REVISIONS

REVIEWED

CHECKED

DESIGN DATE

Fusion Hardware Group Inc

UNIT mm

FUSION HARDWARE GROUP.

TITLE: *Wellington Towel Bars 24" & (30")*

ITEM *WEL-TBR-XXX-24 AS (& 30AS)* REV

SCALE MATERIAL SIZE A4 SHEET OF