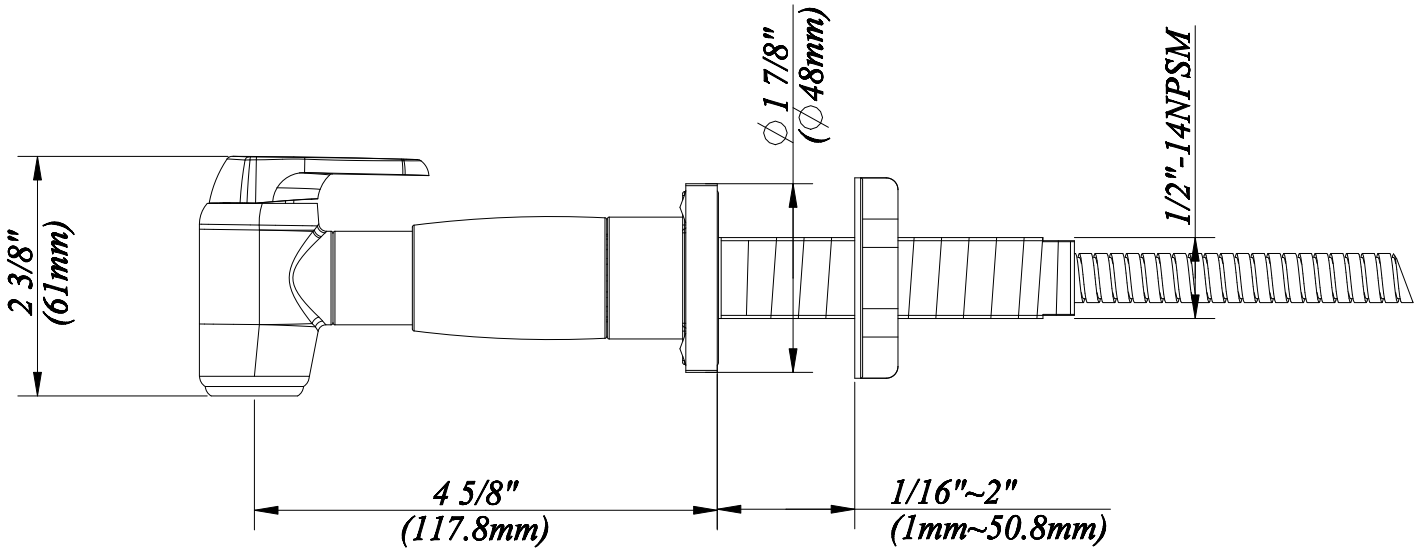

ZONE	DESCRIPTION	BY	DATE	APPROVE
	Ceramic disc Valve Cartridges as Standard			
	Providing a flow rate of (1.9LPM) min at 20psi			

REVISIONS

REVIEW

CHECK

DESIGN Dan Kennard

DRAWN Dan Kennard

DATE 2005.11.01

FUSION HARDWARE GROUP.

TITLE: Kitchen Sprayer

ITEM SFSONSPR

REV A

SCALE 1:1 | MATERIAL | SIZE A4 SHEET | OF 1