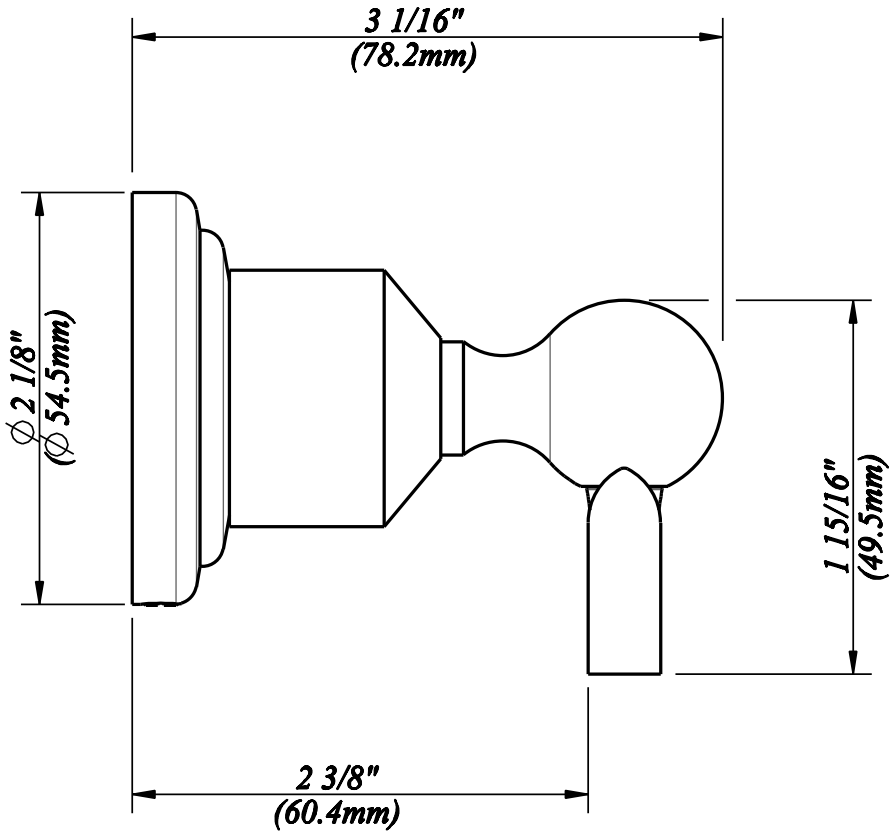

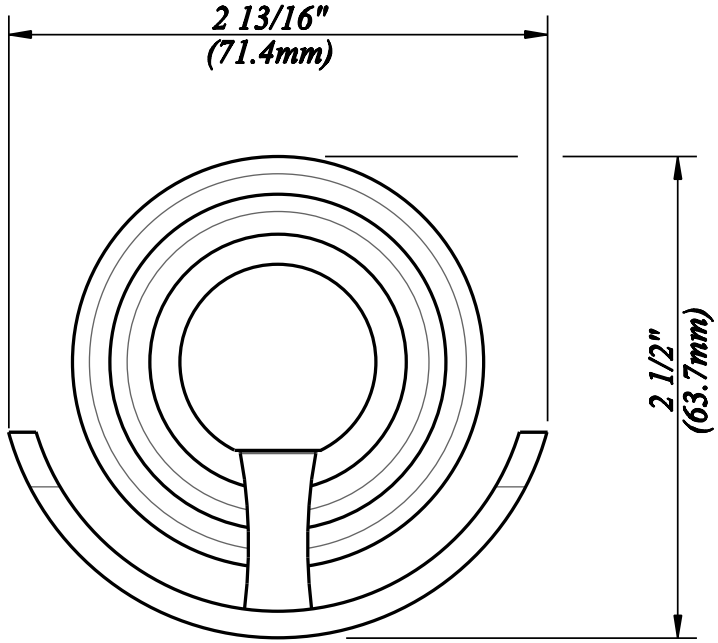

ZONE	DESCRIPTION	BY	DATE	APPROVE

REVISIONS

REVIEWED

CHECKED

DESIGN DATE

Fusion Hardware Group Inc

UNIT mm

FUSION HARDWARE GROUP.

TITLE: *Primary Robe Hook*

ITEM *PRI-RHK-CLR(B5241001)* REV A

SCALE | : | MATERIAL SIZE A4 SHEET | OF |