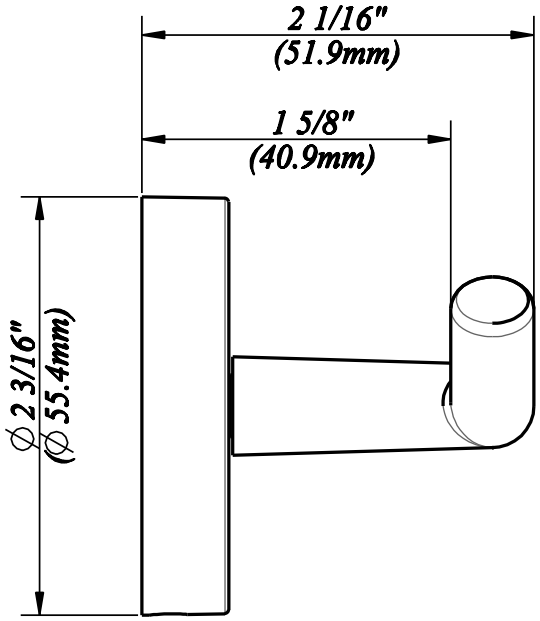

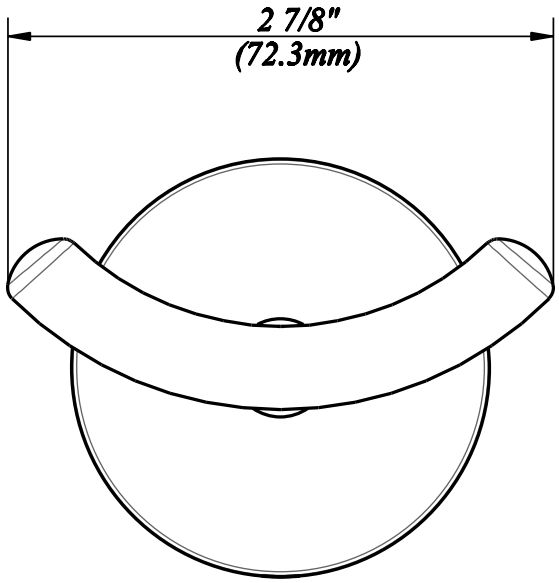

ZONE	DESCRIPTION	BY	DATE	APPROVE

REVISIONS

REVIEWED

CHECKED

DESIGN DATE

Fusion Hardware Group Inc

UNIT mm

FUSION HARDWARE GROUP.

TITLE: *South Beach Robe Hook*

ITEM *SBH-RHK-XXX(B3942100)* REV A

SCALE | : | MATERIAL SIZE A4 SHEET | OF |