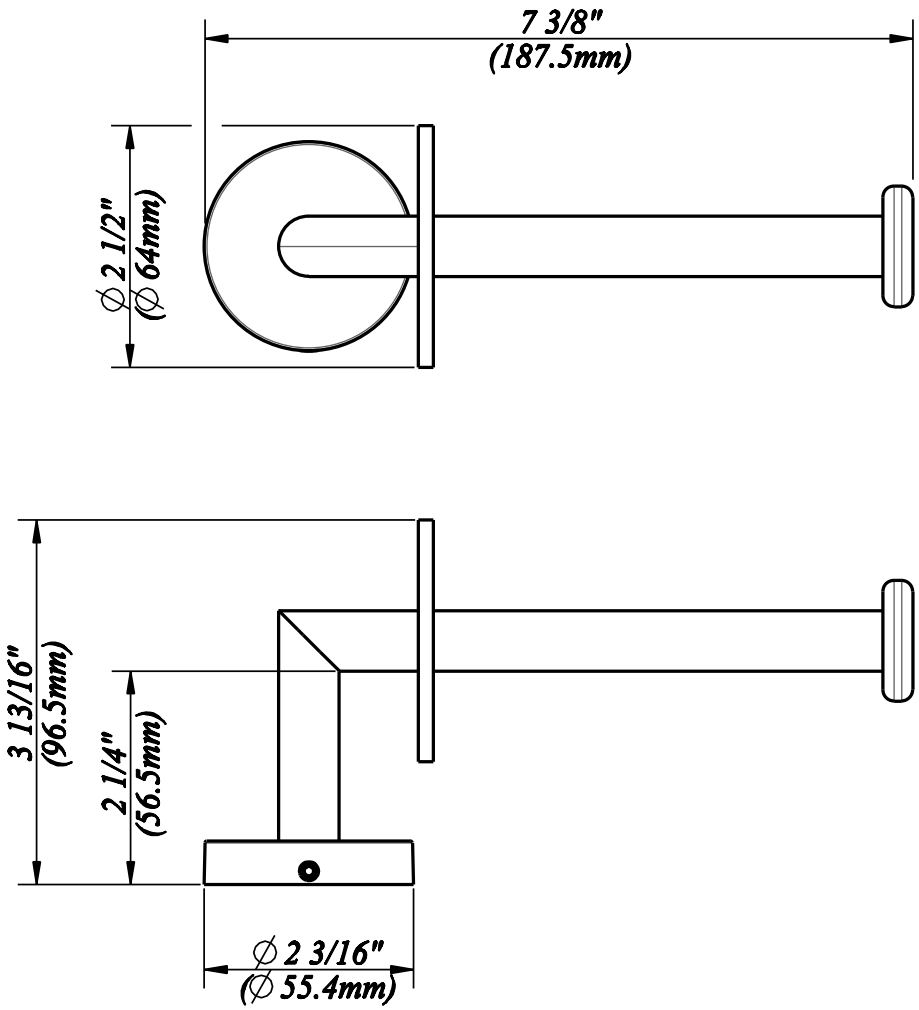

ZONE	DESCRIPTION	BY	DATE	APPROVE

REVISIONS

REVIEWED

CHECKED

DESIGN DATE

Fusion Hardware Group Inc

UNIT mm

FUSION HARDWARE GROUP.

TITLE: *South Beach Paper Holder*

ITEM *SBH-TPH-XXX(B3930500)* REV A

SCALE 1:2 MATERIAL SIZE A4 SHEET OF 1