Audio Engineering Associates

R44 Series

Studio Ribbon Microphones

- An accurate reproduction of the original RCA Ribbon Mic
- Uses the same ribbon material as the original
- Built to the highest studio standards possible
- A single diaphragm Figure 8 ribbon microphone
- 90dB down broadband at 90 degrees
- Custom AEA Transformer
- High SPL capability, max level is 140dB plus above 200Hz
- Low Self Noise
- Consistent polar response
- Operable in high humidity environments
- Sounds equal to or better than the original RCA 44

RCA 44 ribbon microphones have remained an essential part of studio life well after RCA stopped manufacturing them in 1955. The sound and response of the 44 B/BX were unlike anything else available, and was cherished for its smoothness, forgiving nature and unique tonal balance. As collectors began to buy up the supply of RCA 44's through the 90's, the availability of this wonderful ribbon mic to the studio was greatly endangered. Wes Dooley, a specialist in ribbon mics of all kinds, recently began a project to restore availability of the RCA 44 to its rightful position in the studio. After tracking down the folks who built and designed the original RCA 44, Wes' company, Audio Engineering Associates, acquired the ribbon material, made the tooling and custom machined the parts necessary to build the original RCA 44 B/BX design as it was in the 1930s. After years of painstaking work, AEA has again begun production of the most important ribbon mic of all time: the AEA R44C.

How is the R44 different from other ribbon microphones ?

The 44 was RCA's best microphone from the 1930s into the '50s. Is AEA's R44 that good? Both listeners and measurements say that the R44 is better. Why would that be? Using original ribbon material with modern high-strength magnets helps. Combining the original American undamped ribbon design with British RCA 44 innovations that lower the weight and hum sensitivity contributes to further improvement. Listening to comments from both users and ex-RCA engineers for over 20 years has also had a lot to do with how good AEA's R44 has become.

The R44 design runs contrary to all current ribbon microphone manufacturing. It is large and heavy when other microphones are smaller and lighter. The internal ribbon element is by far the longest and its resonance tuning the lowest of today's ribbon microphones. It is a pure undamped ribbon design, an approach that has been out of production for over 50 years while remaining in continuous studio use. It is different, and its sound is unique.

The R44 sounds good on everything. Leave it out and use it whenever you need to do a quick take. Bruce Swedien particularly likes them on vocals, Joe Chicarelli on sax, Allen Sides on electric guitar. Everyone has a favorite use and everyone finds they sound good anywhere: brass, woodwinds, percussion, strings or voice work.

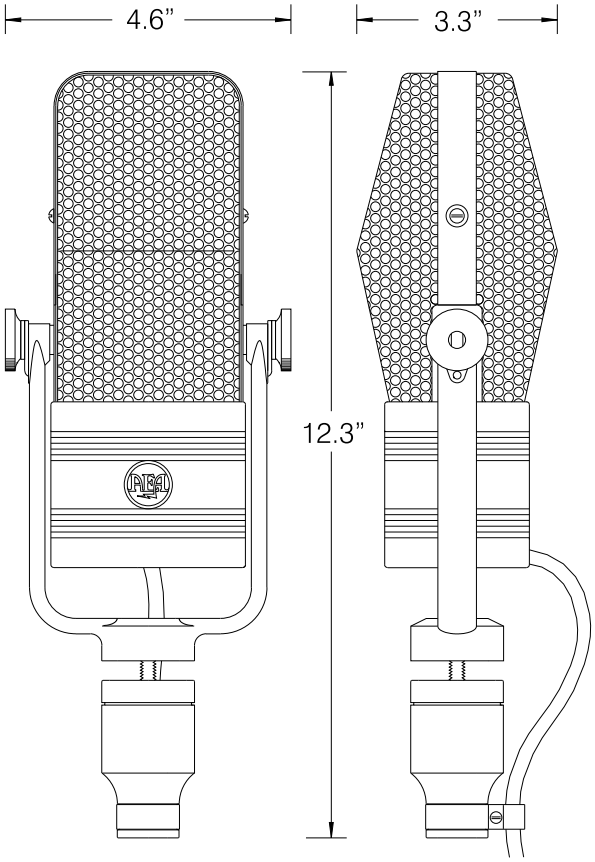

Weight: 7 pounds, 9 ounces in storage case
Length: 12.25 inches, Width: 4.62, Depth: 3.25”

Specifications:

Operating Principle: Velocity microphone

- Frequency Response: Below 30 Hz to above 20 kHz
- Maximum SPL: 140 + dB SPL above 200Hz for 1% third harmonic
- Output Sensitivity: 2.25 mV / Pa into unloaded circuit
- Output Impedance: 270 ohms broadband
- Recommended Load: 1.2 K ohm or greater
- Powering: Not required or recommended
- Polarity: Pin 2 high for positive pressure on the front of the microphone.
- Connector: XLR-3M wired to a 2 meter captive cable

Off Axis Response:

- Polar Pattern: Native bi-directional pattern
- Horizontal: Level changes with angle, frequency response is consistent, –90 dB null at 90 / 270 degrees
- Vertical: Level changes with angle, reduced HF response above and below 0 / 180 degree axis, null at 90 / 270 degrees

Transducer element

- Ribbon Thickness: 1.8 microns (.0000018 meter) of pure aluminum
- Ribbon Width: 4.7 mm
- Ribbon Length: 59.7 mm

Accessories:

- Included: Custom storage / shipping case, stand adapter, manual and attached two-meter microphone cable

Limited Warranty:

- Three years parts and labor, shipping not included.

Options

X	6 dB more output than original RCA 44B/BX sound is slightly more forward, red logo
M	Hand tuning to stereo match a pair
G	Chrome finish grill for the R44 CNE
HP	Switchable high-pass (low-cut) filter
U	Custom body graphics or colors
F	Custom microphone flag

Accessories

B	Gray twill zippered bag
S	Round low profile desk stand

Spares

AD-1	5/8”-27 stand adapter for Vintage RCA 44 & AEA R44C/CX
44VC	Vertical carry case for one or two (44VC-2)

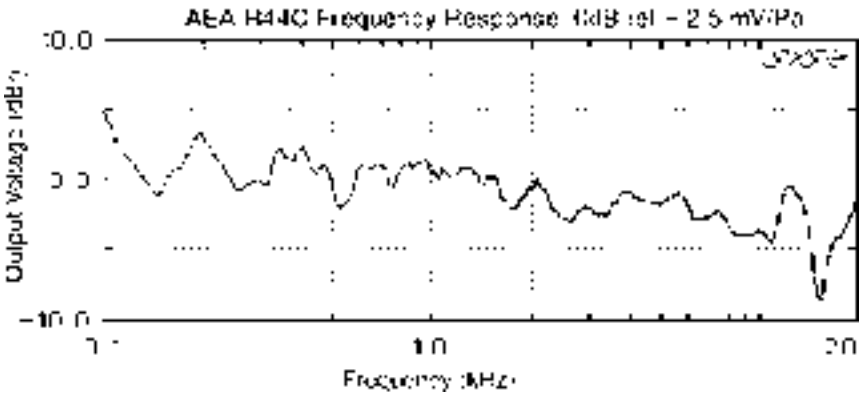

Displayed range from 100 Hz up due to measurement room size limitations.

For more information contact:

Manufactured by Audio Engineering Associates:
1029 N. Allen Ave. Pasadena California 91104 USA
Tel: +626-798-9128 Fax: +626-798-2378 www.wesdooley.com

Other AEA recording tools

R84 Studio Ribbon Microphone
R88 Stereo Ribbon Microphone
R92 Stereo Ribbon Microphone
Stereo Microphone Positioners
Collapsible Tall Stands for on-location
Heavy-duty Microphone Stands and Booms
Decca Trees and Surround Microphone Arrays
Stereo MS Encoders / Decoders for studio or location
Stereo Phase Displays for panel mount or remote use
The New Stereo Soundbook.