EPX2255
Piston Pump

Owner's Manual

Do not use this equipment before reading this manual!

Model Numbers:
0551050M Stand
0551060M Upright Cart
0551070M Low Boy Cart

SprayTECH®
THE DEPENDABLE CHOICE™

NOTE: This manual contains important warnings and instructions. Please read and retain for reference.

SprayTECH
1770 Fernbrook Lane
Minneapolis, MN 55447
Technical Assistance: 1-800-292-4637
Order Entry: 1-800-443-4500
Fax: 1-800-525-9501
www.spraytechinc.com

Printed in U.S.A.

0308 · © SprayTECH. All Rights Reserved. Form No.0294347C

Important Safety Information • Read all safety information before operating the equipment. SAVE THESE INSTRUCTIONS.

This symbol indicates a hazardous situation, which, if not not avoided could result in death or serious injury.

To reduce the risks of fire or explosion, electrical shock and the injury to persons, read and understand all instructions included in this manual. Be familiar with the controls and proper usage of the equipment.

HAZARD: Injection injury

A high pressure paint stream produced by this equipment can pierce the skin and underlying tissues, leading to serious injury and possible amputation. See a physician immediately.

DO NOT TREAT AN INJECTION INJURY AS A SIMPLE CUT! Injection can lead to amputation. See a physician immediately.

The maximum operating range of the sprayer is 3100 PSI / 21.4 MPa fluid pressure.

PREVENTION:

- NEVER aim the gun at any part of the body.
- Do not aim the gun at, or spray any person or animal.
- NEVER allow any part of the body to touch the fluid stream. DO NOT allow body to touch a leak in the fluid hose.
- NEVER put your hand in front of the gun. Gloves will not provide protection against an injection injury.
- ALWAYS lock the gun trigger, shut the pump off, and release all pressure before servicing, cleaning the tip or guard, changing tip, or leaving unattended. Pressure will not be released by turning off the motor. The PRIME/ SPRAY valve or pressure bleed valve must be turned to their appropriate positions to relieve system pressure. Refer to the PRESSURE RELIEF PROCEDURE described in this manual.
- ALWAYS keep the tip guard in place while spraying. The tip guard provides some protection but is mainly a warning device.
- ALWAYS remove the spray tip before flushing or cleaning the system.
- Paint hose can develop leaks from wear, kinking and abuse. A leak can inject material into the skin. Inspect the hose before each use. Do not use hose to lift or pull equipment.
- NEVER use a spray gun without a working trigger lock and trigger guard in place.
- All accessories must be rated at or above 3100 PSI / 21.4 MPa. This includes spray tips, guns, extensions, and hose.
- Do not leave the unit energized or under pressure while unattended. When the unit is not in use, turn off the unit and relieve the pressure in accordance with the PRESSURE RELIEF PROCEDURE described in this manual.
- Verify that all connections are secure before operating the unit. Unsecured parts may eject at great force or leak a high pressure fluid stream causing severe injury.
- Always engage the trigger lock when not spraying. Verify the trigger lock is functioning properly.

NOTE TO PHYSICIAN:

Injection into the skin is a traumatic injury. It is important to treat the injury as soon as possible. DO NOT delay treatment to research toxicity. Toxicity is a concern with some coatings injected directly into the blood stream. Consultation with a plastic surgeon or reconstructive hand surgeon may be advisable.

HAZARD: HAZARDOUS VAPORS

Paints, solvents, insecticides, and other materials can be harmful if inhaled or come in contact with the body. Vapors can cause severe nausea, fainting, or poisoning.

PREVENTION:

- Use a respirator or mask if vapors can be inhaled. Read all instructions supplied with the mask to be sure it will provide the necessary protection.
- Wear protective eyewear.
- Wear protective clothing as required by coating manufacturer.

HAZARD: EXPLOSION OR FIRE

Solvent and paint fumes can explode or ignite.

Property damage and/or severe injury can occur.

PREVENTION:

- Provide extensive exhaust and fresh air introduction to keep the air within the spray area free from accumulation of flammable vapors. Solvent and paint fumes can explode or ignite.
- Do not spray in a confined area.
- Avoid all ignition sources such as static electric sparks, open flames, pilot lights, electrical appliances, and hot objects. Connecting or disconnecting power cords or working light switches can make sparks. Paint or solvent flowing through the equipment is able to result in static electricity.
- Do not smoke in spray area.
- Fire extinguisher must be present and in good working order.
- Place pump at least 25 feet (7.62 meters) from the spray object in a well ventilated area (add more hose if necessary). Flammable vapors are often heavier than air. Floor area must be extremely well ventilated. The pump contains arcing parts that emit sparks and can ignite vapors.
- The equipment and objects in and around the spray area must be properly grounded to prevent static sparks.
- Keep area clean and free of paint or solvent containers, rags and other flammable materials.
- Use only conductive or grounded high pressure fluid hose. Gun must be grounded through hose connections.
- For electric units — power cord must be connected to a grounded circuit.
- Always flush unit into a separate metal container, at low pump pressure, with spray tip removed. Hold gun firmly against side of container to ground container and prevent static sparks.
- Follow the material and solvent manufacturer's warnings and instructions. Know the contents of the paints and solvents being sprayed. Read all Material Safety Data Sheets (MSDS) and container labels provided with the paints and solvents. Follow the paint and solvent manufacturer's safety instructions.
- Use extreme caution when using materials with a flashpoint below 70ºF (21ºC). Flashpoint is the temperature that a fluid can produce enough vapors to ignite.
- Plastic can cause static sparks. Never hang plastic to enclose a spray area. Do not use plastic drop cloths when spraying flammable materials.
- Use lowest possible pressure to flush equipment.
- Do not spray onto pump assembly.

© SprayTECH. All rights reserved.

Important Safety Information • Read all safety information before operating the equipment. SAVE THESE INSTRUCTIONS.

HAZARD: EXPLOSION HAZARD DUE TO INCOMPATIBLE MATERIALS

Will cause property damage or severe injury.

PREVENTION:

- Do not use materials containing bleach or chlorine.
- Do not use halogenated hydrocarbon solvents such as bleach, mildewcide, methylene chloride and 1,1,1 - trichloroethane. They are not compatible with aluminum.
- Contact your coating supplier about the compatibility of material with aluminum.

HAZARD: GENERAL

Can cause severe injury or property damage.

PREVENTION:

- Read all instructions and safety precautions before operating equipment.
- Follow all appropriate local, state, and national codes governing ventilation, fire prevention, and operation.
- The United States Government Safety Standards have been adopted under the Occupational Safety and Health Act (OSHA). These standards, particularly part 1910 of the General Standards and part 1926 of the Construction Standards should be consulted.
- Use only manufacturer authorized parts. User assumes all risks and liabilities when using parts that do not meet the minimum specifications and safety requirements of the pump manufacturer.
- All hoses, fittings, and filter parts must be secured before operating spray pump. Unsecured parts can eject at great force or leak a high pressure fluid stream causing severe injury.
- Before each use, check all hoses for cuts, leaks, abrasion or bulging of cover. Check for damage or movement of couplings. Immediately replace the hose if any of these conditions exist. Never repair a paint hose. Replace it with another grounded high-pressure hose.
- Do not kink or over-bend the hose. Airless hose can develop leaks from wear, kinking and abuse. A leak can inject material into the skin.
- Do not expose the hose to temperatures or pressures in excess of those specified by manufacturer.
- Do not spray outdoors on windy days.
- Wear clothing to keep paint off skin and hair.
- Do not operate or spray near children. Keep children away from the equipment at all times.
- Do not overreach or stand on an unstable support. Keep effective footing and balance at all times.
- Use lowest possible pressure to flush equipment.
- Stay alert and watch what you are doing.
- Do not operate the unit when fatigued or under the influence of drugs or alcohol.
- For electric units — Always unplug cord from outlet before working on equipment.
- Do not use the hose as a strength member to pull or lift the equipment.
- Do not lift by cart handle when loading or unloading.

Grounding Instructions

This product must be grounded. In the event of an electrical short circuit, grounding reduces the risk of electric shock by providing an escape wire for the electric current. This product is equipped with a cord having a grounding wire with an appropriate grounding plug. The plug must be plugged into an outlet that is properly installed and grounded in accordance with all local codes and ordinances.

WARNING - Improper installation of the grounding plug can result in a risk of electric shock.

If repair or replacement of the cord or plug is necessary, do not connect the green grounding wire to either flat blade terminal. The wire with insulation having a green outer surface with or without yellow stripes is the grounding wire and must be connected to the grounding pin.

Check with a qualified electrician or serviceman if the grounding instructions are not completely understood, or if you are in doubt as to whether the product is properly grounded. Do not modify the plug provided. If the plug will not fit the outlet, have the proper outlet installed by a qualified electrician.

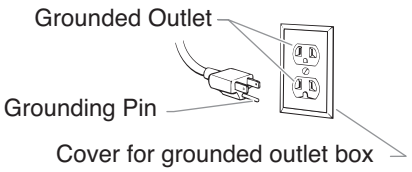

IMPORTANT: Use only a 3-wire extension cord that has a 3-blade grounding plug and a 3-slot receptacle that will accept the plug on the product. Make sure your extension cord is in good condition. When using an extension cord, be sure to use one heavy enough to carry the current your product will draw. An undersized cord will cause a drop in line voltage resulting in loss of power and overheating. A 12 gauge cord is recommended. If an extension cord is to be used outdoors, it must be marked with the suffix W-A after the cord type designation. For example, a designation of SJTW-A would indicate that the cord would be appropriate for outdoor use.

Specifications

Gallons per minute (GPM)..... 0.56 (2.1 LPM)

Maximum tip sizes..... 0.023”

Maximum pressure..... 3100 PSI (21.4 MPa)

Power ..... 1.35 HP DC motor, 120VAC

Weight (stand unit) ..... 33 lbs. (15 kg)

Maximum hose length ..... 300’ (91.4 m)

© SprayTECH. All rights reserved.

Table of Contents

Safety Precautions **2**
Specifications **3**
General Description **4**
Operation **4**
Setup 4
Preparing to Paint 5
Painting 5
Pressure Relief Procedure 6
Spraying **6**
Spraying Technique 6
Practice 6
Cleanup **7**
Cleaning the Spray Tip 7
Maintenance **7**
General Repair and Service Notes 7
Replacing the PRIME/SPRAY Valve 8
Replacing the Filters 8
Replacing the Motor Assembly 8
Replacing the Gears 9
Replacing the Transducer 10
Servicing the Fluid Section 10
Troubleshooting **12**
Parts List **18**
Main Assembly 18
Motor Assembly 19
Suction Set Assembly 19
Labels 19
Gear Box Assembly 20
Stand Assembly 21
Upright Cart Assembly 21
Fluid Section Assembly 22
Low Boy Cart Assembly 23
Electrical Schematic **23**
Limited Warranty **24**

General Description

This airless sprayer is a precision power tool used for spraying many types of materials. Read and follow this Owner's Manual carefully for proper operating instructions, maintenance, and safety information.

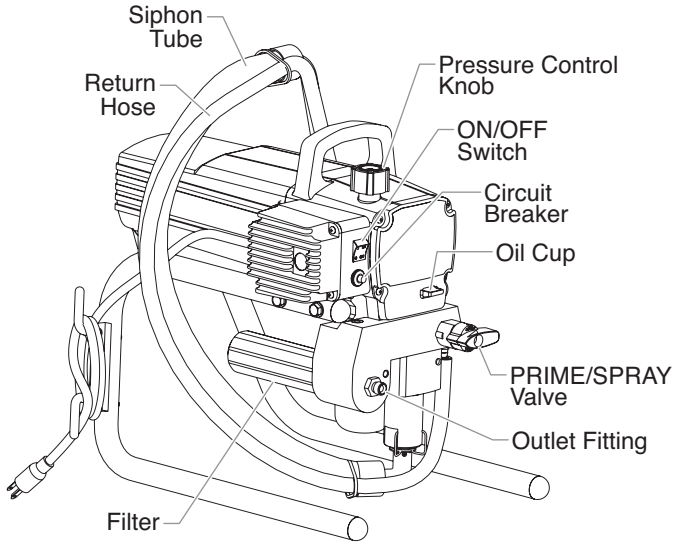

Operation

This equipment produces a fluid stream at extremely high pressure. Read and understand the warnings in the Safety Precautions section at the front of this manual before operating this equipment.

Setup

Perform the following procedure before plugging in the power cord of an electric sprayer.

1. Ensure that the siphon tube and the return hose are attached and secure.
2. Using a wrench, attach a minimum of 50' of 1/4" nylon airless spray hose to the outlet fitting on the sprayer. Tighten securely.
3. Attach an airless spray gun to the spray hose. Using two wrenches (one on the gun and one on the hose), tighten securely.

NOTE: Do not attach the tip to the spray gun yet. Remove the tip if it is already attached.

Make sure all airless hoses and spray guns are electrically grounded and rated at or above the maximum operating pressure range of the airless sprayer.

4. Make sure the pressure control knob is turned fully counterclockwise to its lowest pressure setting.
5. Make sure the ON/OFF switch is in its OFF position.
6. Fill the oil cup with approximately one tablespoon of separating oil (P/N 0279920).

IMPORTANT: Never operate unit for more than ten seconds without fluid. Operating this unit without fluid will cause unnecessary wear to the packings.

7. Make sure the electrical service is 120V, 15 amp minimum.
8. Plug the power cord into a properly grounded outlet at least 25' from the spray area.

IMPORTANT: Always use a minimum 12 gauge, three-wire extension cord with a grounded plug. Never remove the third prong or use an adapter.

Preparing a New Sprayer

If this sprayer is new, it is shipped with test fluid in the fluid section to prevent corrosion during shipment and storage. This fluid must be cleaned out of the system thoroughly with mineral spirits before spraying paint.

IMPORTANT: Always keep the trigger lock on the spray gun in the locked position while preparing the system.

1. Place the siphon tube into a container of mineral spirits.
2. Place the return hose into a metal waste container.
3. Set the pressure to minimum by turning the pressure control knob fully counterclockwise.

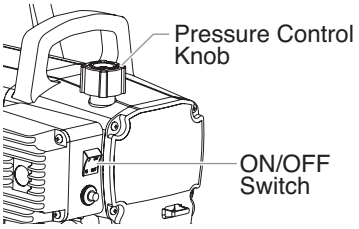

© SprayTECH. All rights reserved.

4. Move the PRIME/SPRAY valve down to the PRIME position.
5. Turn on the unit by moving the ON/OFF switch to the ON position.
6. Allow the sprayer to run for 15–30 seconds to flush the test fluid out through the return hose and into the waste container.
7. Turn off the unit by moving the ON/OFF switch to the OFF position.

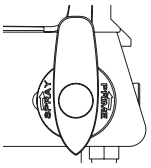

Preparing to Paint

Before painting, it is important to make sure that the fluid in the system is compatible with the paint that is going to be used.

NOTE: Incompatible fluids and paint may cause the valves to become stuck closed, which would require disassembly and cleaning of the sprayer's fluid section.

IMPORTANT: Always keep the trigger lock on the spray gun in the locked position while preparing the system.

1. Place the siphon tube into a container of the appropriate solvent. Examples of the appropriate solvent are water for latex paint or mineral spirits for oil-based paints.
2. Place the return hose into a metal waste container.
3. Set the pressure to minimum by turning the pressure control knob fully counterclockwise.
4. Move the PRIME/SPRAY valve down to the PRIME position.

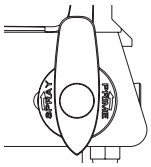

NOTE: Hold the return hose in the waste container when moving the PRIME/ SPRAY valve to PRIME in case the sprayer is pressurized.

5. Turn on the sprayer by moving the ON/OFF switch to the ON position.
6. Allow the sprayer to run for 15–30 seconds to flush the old solvent out through the return hose and into the metal waste container.
7. Turn off the sprayer by moving the ON/OFF switch to the OFF position.

NOTE: Make sure that the spray gun does not have a tip or tip guard installed.

8. Move the PRIME/SPRAY valve up to the SPRAY position.
9. Turn on the sprayer.
10. Unlock the gun by turning the gun trigger lock to the unlocked position.

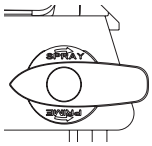

Ground the gun by holding it against the edge of the metal container while flushing. Failure to do so may lead to a static electric discharge, which may cause a fire.

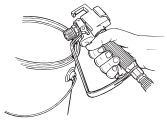

11. Trigger the gun into the metal waste container until the old solvent is gone and fresh solvent is coming out of the gun.
12. Lock the gun by turning the gun trigger lock to the locked position.
13. Set down the gun and increase the pressure by turning the pressure control knob slowly clockwise.
14. Check the entire system for leaks. If leaks occur, turn the unit off and follow the "Pressure Relief Procedure" in this manual before tightening any fittings or hoses.
15. Follow the "Pressure Relief Procedure" in this manual before changing from solvent to paint.

Be sure to follow the pressure relief procedure when shutting down the sprayer for any purpose, including servicing or adjusting any part of the spray system, changing or cleaning spray tips, or preparing for cleanup.

Painting

1. Place the siphon tube into a container of paint.
2. Place the return hose into a metal waste container.
3. Set the pressure to minimum by turning the pressure control knob fully counterclockwise.

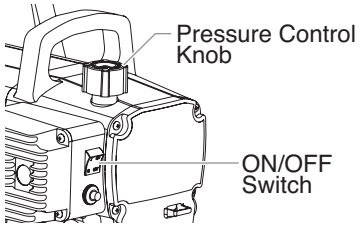

4. Move the PRIME/SPRAY valve down to the PRIME position.

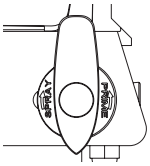

NOTE: Hold the return hose in the waste container when moving the PRIME/ SPRAY valve to PRIME in case the sprayer is pressurized.

5. Turn on the sprayer by moving the ON/OFF switch to the ON position.
6. Allow the sprayer to run until paint is coming through the return hose into the metal waste container.
7. Turn off the sprayer by moving the ON/OFF switch to the OFF position.
8. Remove the return hose from the waste container and place it in its operating position above the container of paint.
9. Move the PRIME/SPRAY valve up to the SPRAY position.
10. Turn on the sprayer.
11. Unlock the gun by turning the gun trigger lock to the unlocked position.

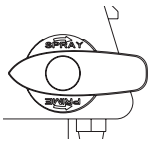

Ground the gun by holding it against the edge of the metal container while flushing. Failure to do so may lead to a static electric discharge, which may cause a fire.

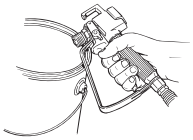

12. Trigger the gun into the metal waste container until all air and solvent is flushed from the spray hose and paint is flowing freely from the gun.
13. Lock the gun by turning the gun trigger lock to the locked position.
14. Turn off the sprayer.
15. Attach tip guard and tip to the gun as instructed by the tip guard or tip manuals.

POSSIBLE INJECTION HAZARD. Do not spray without the tip guard in place. Never trigger the gun unless the tip is in either the spray or the unclog position. Always engage the gun trigger lock before removing, replacing or cleaning tip.

16. Turn on the sprayer.
17. Increase the pressure by turning the pressure control knob slowly clockwise and test the spray pattern on a piece of cardboard. Adjust the pressure control knob until the spray from the gun is completely atomized. Try to keep the pressure control knob at the lowest setting that maintains good atomization.

NOTE: Turning the pressure up higher then needed to atomize the paint will cause premature tip wear and additional overspray.

© SprayTECH. All rights reserved.

Pressure Relief Procedure

Be sure to follow the pressure relief procedure when shutting the unit down for any purpose, including servicing or adjusting any part of the spray system, changing or cleaning spray tips, or preparing for cleanup.

1. Lock the gun by turning the gun trigger lock to the locked position.
2. Turn off the sprayer by moving the ON/OFF switch to the OFF position.
3. Set the pressure to minimum by turning the pressure control knob fully counterclockwise.
4. Unlock the gun by turning the gun trigger lock to the unlocked position.
5. Hold the metal part of the gun firmly to the side of a metal container to ground the gun and avoid a build up of static electricity.
6. Trigger the gun to remove any pressure that may still be in the hose.
7. Lock the gun by turning the gun trigger lock to the locked position.
8. Move the PRIME/SPRAY valve down to the PRIME position.

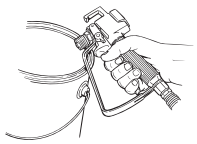

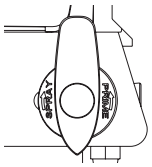

Spraying

NOTE: When spraying block filler, mastics or high solid coating, remove the gun filter and high pressure filter screens.

Spraying Technique

The key to a good paint job is an even coating over the entire surface. This is done by using even strokes. Keep your arm moving at a constant speed and keep the spray gun at a constant distance from the surface. The best spraying distance is 10 to 12 inches between the spray tip and the surface.

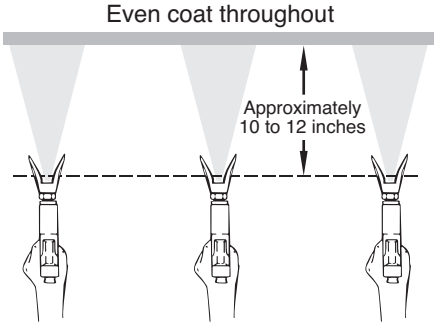

Keep stroke smooth and at an even speed.

Keep the spray gun at right angles to the surface. This means moving your entire arm back and forth rather than just flexing your wrist.

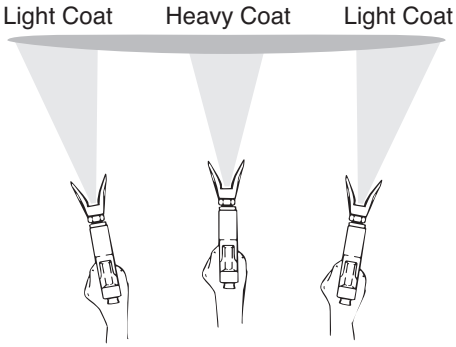

Do not flex wrist while spraying.

Keep the spray gun perpendicular to the surface, otherwise one end of the pattern will be thicker than the other.

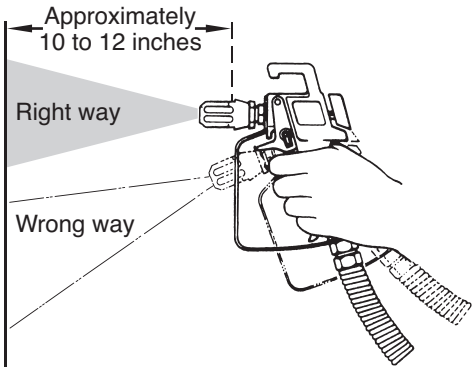

The spray gun should be triggered by turning it on and off with each stroke. This will save paint and avoid paint buildup at the end of the stroke. Do not trigger the gun during the middle of a stroke. This will result in an uneven spray and splotchy coverage.

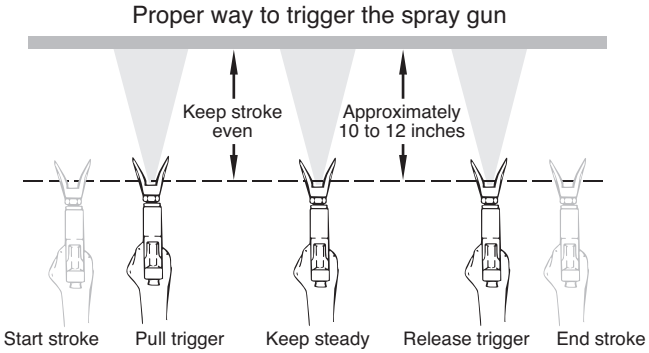

Overlap each stroke by about 30%. This will ensure an even coating.

When you stop painting, lock the gun trigger lock, turn the pressure control knob counterclockwise to its lowest setting and set the PRIME/SPRAY valve to PRIME. Turn the ON/OFF switch to the OFF position and unplug the sprayer.

Practice

1. Be sure that the paint hose is free of kinks and clear of objects with sharp cutting edges.
2. Turn the pressure control knob counterclockwise to its to its lowest setting.
3. Move the PRIME/SPRAY valve up to its SPRAY position.
4. Turn the pressure control knob clockwise to its highest setting. The paint hose should stiffen as paint begins to flow through it.
5. Unlock the gun trigger lock.
6. Trigger the spray gun to bleed air out of the hose.
7. When paint reaches the spray tip, spray a test area to check the spray pattern.
8. Use the lowest pressure setting necessary to get a good spray pattern. If the pressure is set too high, the spray pattern will be too light. If the pressure is set too low, tailing will appear or the paint will spatter out in gobs rather than in a fine spray.

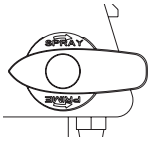

Good spray pattern

Paint tailing pattern

© SprayTECH. All rights reserved.

Cleanup

Do not use gasoline to clean the sprayer.

Special cleanup instructions for use with flammable solvents:

- Always flush spray gun preferably outside and at least one hose length from spray pump.
- If collecting flushed solvents in a one gallon metal container, place it into an empty five gallon container, then flush solvents.
- Area must be free of flammable vapors.
- Follow all cleanup instructions.

IMPORTANT: The sprayer, hose, and gun should be cleaned thoroughly after daily use. Failure to do so permits material to build up, seriously affecting the performance of the unit.

Always spray at minimum pressure with the gun nozzle tip removed when using mineral spirits or any other solvent to clean the sprayer, hose, or gun. Static electricity buildup may result in a fire or explosion in the presence of flammable vapors.

1. Follow the "Pressure Relief Procedure" found in the Operation section of this manual.
2. Remove the gun tip and tip guard and clean with a brush using the appropriate solvent.
3. Place the siphon tube into a container of the appropriate solvent. Examples of the appropriate solvent are water for latex paint or mineral spirits for oil-based paints.
4. Place the return hose into a metal waste container.
5. Set the pressure to minimum by turning the pressure control knob fully counterclockwise.
6. Move the PRIME/SPRAY valve down to its PRIME position.

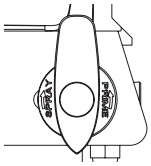

NOTE: Hold the return hose in the waste container when moving the PRIME/ SPRAY valve to PRIME in case the sprayer is pressurized.

7. Turn on the sprayer by moving the ON/OFF switch to the ON position.
8. Allow the solvent to circulate through the sprayer and flush the paint out of the return hose into the metal waste container.
9. Turn off the sprayer by moving the ON/OFF switch to the OFF position.
10. Move the PRIME/SPRAY valve up to its SPRAY position.
11. Turn on the sprayer.

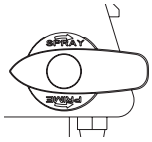

Ground the gun by holding it against the edge of the metal container while flushing. Failure to do so may lead to a static electric discharge, which may cause a fire.

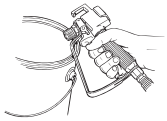

12. Trigger the gun into the metal waste container until the paint is flushed out of the hose and solvent is coming out of the gun.
13. Continue to trigger the spray gun into the waste container until the solvent coming out of the gun is clean.

NOTE: For long-term or cold weather storage, pump mineral sprits through the entire system.

14. Follow the "Pressure Relief Procedure" found in the Operation section of this manual.
15. Unplug the unit and store in a clean, dry area.

IMPORTANT: Do not store the unit under pressure.

Cleaning the Spray Tip

1. Flush the gun with solvent immediately after the work is completed.
2. Oil the retractor pins to prevent them from seizing up.

Should the spray tip become clogged, reverse the spray tip with the lever and pull the trigger. Once the obstruction comes out of the spray tip, release the trigger, reverse the spray tip back to the spray pattern setting, and resume spraying.

Do not attempt to clean the tip with your finger.

Do not use a needle or other sharp pointed instrument to clean the tip. The hard tungsten carbide is brittle and can be chipped.

Maintenance

Before proceeding, follow the Pressure Relief Procedure outlined previously in this manual. Additionally, follow all other warnings to reduce the risk of an injection injury, injury from moving parts or electric shock. Always unplug the sprayer before servicing!

General Repair and Service Notes

1. Before repairing any part of the sprayer, read the instructions carefully, including all warnings.

IMPORTANT: Never pull on a wire to disconnect it. Pulling on a wire could loosen the connector from the wire.

2. Test your repair before regular operation of the sprayer to be sure that the problem is corrected. If the sprayer does not operate properly, review the repair procedure to determine if everything was done correctly. Refer to the Troubleshooting section to help identify other possible problems.
3. Make sure that the service area is well ventilated in case solvents are used during cleaning. Always wear protective eyewear while servicing. Additional protective equipment may be required depending on the type of cleaning solvent. Always contact the supplier of solvents for recommendations.
4. If you have any further questions concerning your SprayTECH Airless Sprayer, call SprayTECH:

Technical Service..... **1-800-292-4637**
Fax **1-800-525-9501**

© SprayTECH. All rights reserved.

Replacing the prime/spray Valve

Perform the following procedure using PRIME/SPRAY valve replacement kit P/N 0507690.

1. Drive the groove pin out of the valve handle.
2. Remove the valve handle and the cam base.
3. Using a wrench, loosen and remove the valve housing assembly from the pump manifold.
4. Make sure the gasket is in place and thread the new valve housing assembly into the pump manifold. Tighten securely with a wrench.
5. Place the cam base over the valve housing assembly. Lubricate the cam base with grease and line up the cam with the pump manifold using the dowel pin.
6. Line up the hole on the valve stem with the hole in the valve handle.
7. Insert the groove pin into the valve handle and through the valve stem to secure the valve handle in position.

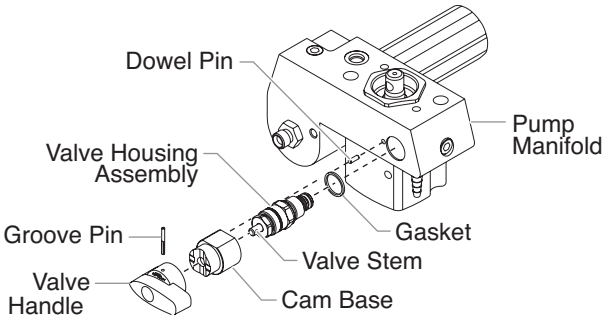

Cleaning and/or Replacing the Filters

Pump Filter

1. Loosen and remove the filter housing by hand. Pull the filter out of the pump manifold.
2. Slip the filter off of the filter support spring.
3. Inspect the filter. Based on inspection, clean or replace the filter.
4. Inspect the filter seal. Based on inspection, clean or replace the filter seal.
5. Slide the new or cleaned filter over the filter support spring with the adapter in place. Push the filter into the center of the pump manifold.
6. Slide the filter housing over the filter and thread it into the pump manifold until secure.

NOTE: The filter housing should be hand-tightened, but make sure the filter housing is seated fully into the pump manifold.

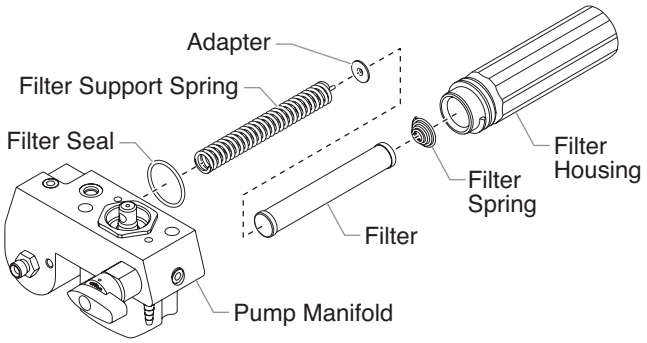

Gun Filter

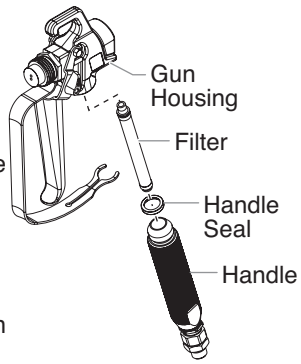

1. Pull the bottom of the trigger guard forward so that it comes loose from the handle assembly.
2. Loosen and remove the handle assembly from the gun head.
3. Pull the old filter out of the gun head.
4. Slide the new filter, tapered end first, into the gun head.
5. Make sure the handle seal is in position and thread the handle assembly into the gun head until secure.
6. Snap the trigger guard back onto the handle assembly.

Gun Filter Chart

Part Number	Application	Filter Type	Color of Filter Body
0089960	Synthetic resin, enamels, clean varnishes, stains azures	Extrafine	red
0089959	Base coat enamels, primer enamels, fillers, marking paints, textured enamels	Fine	yellow
0089958	Emulsions, latex paints, acrylic paints	Medium	white
0089957	Heavy bodied latex, blockfillers, elastometrics	Coarse	green

NOTE: For more detail, part number information, and an assembly drawing, please see the G-10 XL Airless Spray Gun Owner's Manual (P/N 0296237).

Replacing the Motor Assembly

1. Perform the Pressure Relief Procedure and unplug the sprayer.
2. Remove the four motor cover screws. Remove the motor cover.
3. Remove the four heat sink assembly screws. Pull the heat sink assembly away from the gear box housing.
4. Disconnect the five wires from the relay that is mounted on the inside of the heat sink assembly.
5. Remove the three relay mounting screws from the heat sink assembly. Remove the relay.
6. Using the three relay mounting screws, install the new relay onto the heat sink assembly. Tighten the screws securely.
7. Connect the five wires to the new relay (refer to the electrical schematic in the Parts List section of this manual).
8. Using the four heat sink assembly screws, install the heat sink assembly onto the gear box housing. Tighten the screws securely.
9. Disconnect the black and red wires coming from the gear box housing. Disconnect the black and red wires from the capacitors. Disconnect the black and red wires from the motor.
10. Loosen and remove the four motor mounting screws.
11. Pull the motor out of the gear box housing.

NOTE: If the motor will not dislodge from the pump housing:

- **Remove the front cover plate.**
- **Using a rubber mallet, carefully tap on the front of the motor crankshaft that extends through the slider assembly.**

© SprayTECH. All rights reserved.

12. With the motor removed, inspect the gears in the gear box housing for damage or excessive wear. Replace the gears, if necessary.
13. Install the new motor into the gear box housing.

NOTE: Rotate the motor fan manually until the armature gear engages with the mating gear in the gear box housing.

14. Secure the motor with the four motor mounting screws.
15. Push the new capacitors into their clip on the new motor.
16. Reconnect the wires (refer to the electrical schematic in the Parts List section of this manual).
17. Slide the motor cover over the motor. Secure the motor cover with the four motor cover screws.

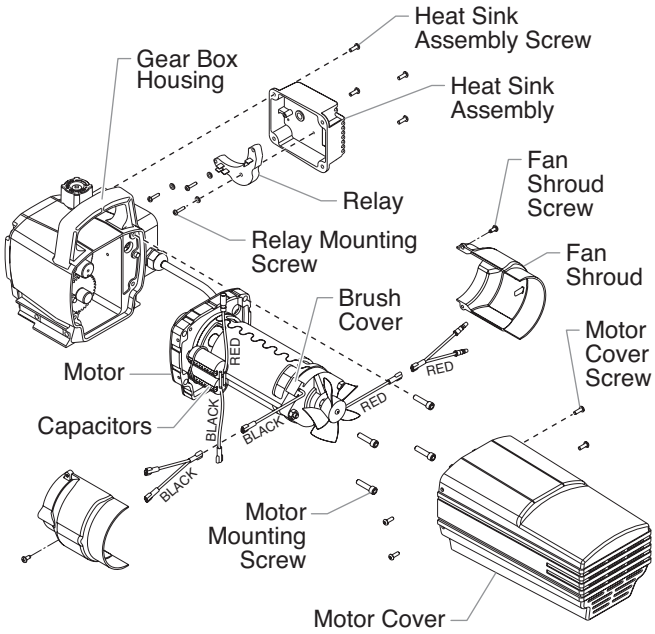

Replacing the Motor Brushes

Perform this procedure using Motor Brush Kit P/N 0508645.

1. Perform the Pressure Relief Procedure and unplug the sprayer.
2. Loosen and remove the four motor cover screws. Remove the motor cover.
3. Loosen and remove the two fan shroud screws. Remove the fan shroud.
4. Using a small screwdriver, pry off the two plastic brush covers.
5. Disconnect the black and red wires from the motor brushes. Remove the motor brushes.
6. Install the new motor brushes and snap on the plastic brush covers.
7. Reconnect the black and red wires from the motor brushes (refer to the electrical schematic in the Parts List section of this manual).
8. Position the fan shroud over the motor fan. Secure the fan shroud with the two fan shroud screws.
9. Slide the motor cover over the motor. Secure the motor cover with the four motor cover screws.

Replacing the Gears

1. Perform the Pressure Relief Procedure and unplug the sprayer.
2. Loosen and remove the four motor cover screws. Remove the motor cover.
3. Disconnect the black and red wires coming from the gear box housing.
4. Loosen and remove the four motor mounting screws.
5. Pull the motor out of the gear box housing.

NOTE: If the motor will not dislodge from the pump housing:
- **Remove the front cover plate.**
- **Using a rubber mallet, carefully tap on the front of the motor crankshaft that extends through the slider assembly.**

6. Inspect the armature gear on the end of the motor for damage or excessive wear. If this gear is completely worn out, replace the entire motor.
7. Remove and inspect the 2nd stage gear for damage or excessive wear. Replace if necessary.
8. Remove and inspect the crankshaft/gear assembly for damage or excessive wear. Replace if necessary.
9. Reassemble the pump by reversing the above steps. During reassembly, make sure the thrust washers is in place.

NOTE: Refill the gear box with five ounces of Lubriplate (P/N 9870307).

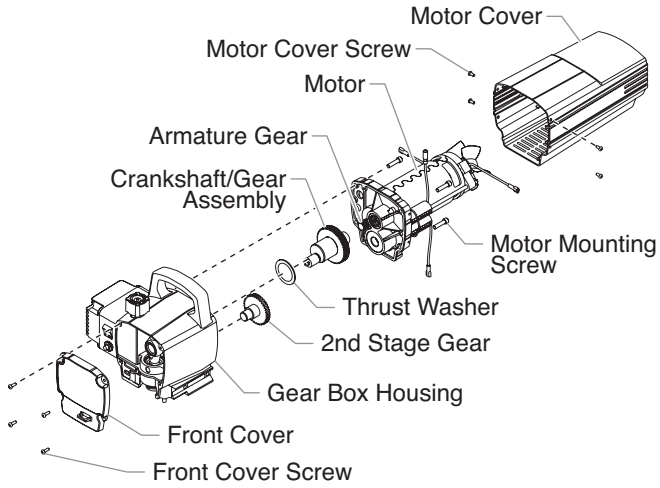

© SprayTECH. All rights reserved.

Replacing the Transducer

1. Loosen and remove the four front cover screws. Remove the front cover.
2. Stop the sprayer at the bottom of its stroke so that the piston is in its lowest position.
3. Perform the Pressure Relief Procedure and unplug the sprayer.

Before proceeding, follow the Pressure Relief Procedure outlined previously in this manual. Additionally, follow all other warnings to reduce the risk of an injection injury, injury from moving parts or electric shock. Always unplug the sprayer before servicing!

4. Tilt the sprayer back for easy access to the fluid section.
5. Slide the retaining ring up on the slider assembly to expose the connecting pin.
6. Push the connecting pin forward through the slider assembly and piston. The connecting pin will fall into a recessed area of the gear box housing where it can be retrieved.
7. Using 3/8” a hex wrench, loosen and remove the two pump manifold mounting screws.
8. Pull the pump manifold down off of the gear box housing.
9. Using a wrench, remove the transducer assembly from the pump manifold.
10. Thread the new transducer assembly into the pump manifold. Tighten securely with a wrench.
11. Reassemble the pump by reversing steps 1–8.

IMPORTANT: Make sure the transducer is aligned properly with the hole in the pump block during reassembly. Improper alignment may cause damage to the transducer o-ring.

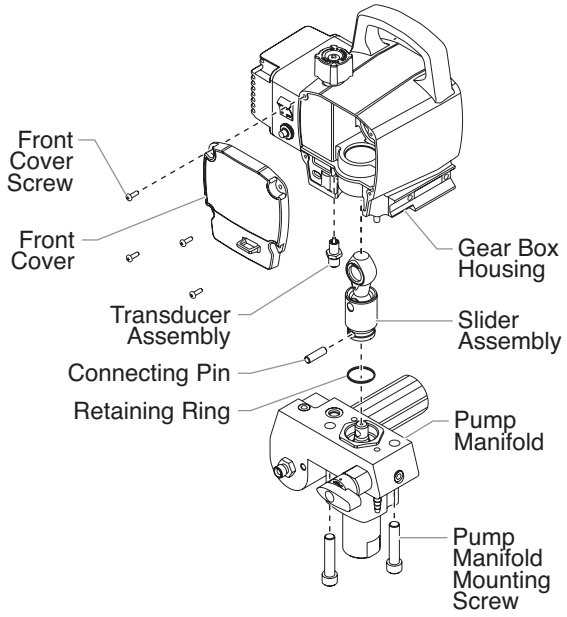

Servicing the Fluid Section

Use the following procedures to service the valves and repack the fluid section. Perform the following steps before performing any maintenance on the fluid section.

1. Loosen and remove the four front cover screws. Remove the front cover.
2. Position the slider assembly at the bottom, dead-center of its stroke so that the connecting pin and retaining ring are visible below the slider assembly. This is done by turning the sprayer on and off in short bursts until the connecting pin is visible below the slider housing.
3. Perform the Pressure Relief Procedure and unplug the sprayer.

Before proceeding, follow the Pressure Relief Procedure outlined previously in this manual. Additionally, follow all other warnings to reduce the risk of an injection injury, injury from moving parts or electric shock. Always unplug the sprayer before servicing!

4. For Upright Cart units, remove the return hose from the hose clip on the siphon tube. Unscrew the siphon tube from the inlet valve housing.
5. For Low Boy cart units, remove the retaining ring from the bottom of the inlet valve housing using a snap ring pliers. Remove the return hose clamp and pull the return hose from its fitting on the pump manifold. Remove the suction set assembly.
6. Loosen and remove the high-pressure hose from the outlet fitting on pump manifold.

Servicing the Valves

The design of the fluid section allows access to the inlet valve and seat as well as the outlet valve and seat without completely disassembling the fluid section. It is possible that the valves may not seat properly because of debris stuck in the foot valve seat or outlet valve seat. Use the following instructions to clean the valves and reverse or replace the seats.

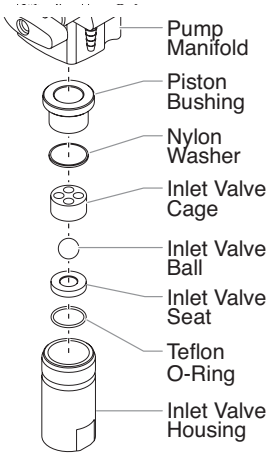

1. Using a wrench, loosen and remove the inlet valve housing from the pump manifold.
2. Clean out any debris in the inlet valve housing and examine the valve housing and seat. If the seat is damaged, reverse or replace the seat.
3. Using a 5/16” hex wrench, loosen and remove the outlet valve retainer from the piston rod.

NOTE: Always service the outlet valve with the piston rod attached to the pump. This will prevent the piston rod from rotating during disassembly of the outlet valve.

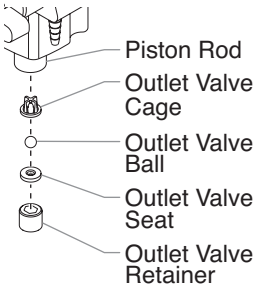

4. Clean out any debris and examine the valve housing and seat. If the seat is damaged, reverse or replace the seat.
5. Remove, clean, and inspect the outlet valve cage and outlet valve ball. Replace if they are worn or damaged.
6. Reassemble the valves by reversing the steps above.

© SprayTECH. All rights reserved.

Repacking the Fluid Section

1. Remove the inlet valve assembly using the steps in the "Servicing the Valves" procedure above.

NOTE: The outlet valve does not need to be disassembled from the piston rod for this procedure.

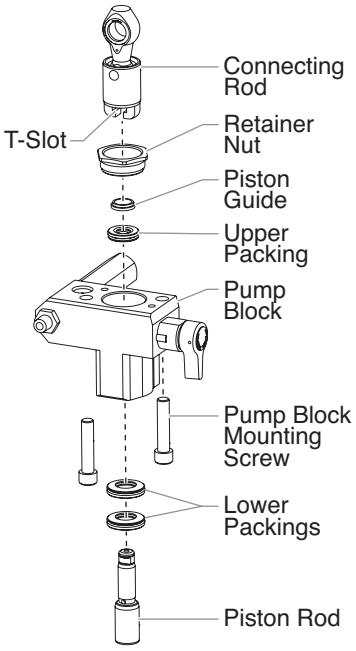

2. Slide the retaining ring up on the slider assembly to expose the connecting pin.
3. Push the connecting pin forward through the slider assembly and piston. The connecting pin will fall into a recessed area of the gear box housing where it can be retrieved.
4. Using 3/8" a hex wrench, loosen and remove the two pump manifold mounting screws.
5. Pull the pump manifold down off of the gear box housing.
6. Slide the piston rod out through the bottom of the pump manifold.
7. Loosen and remove the retainer nut and piston guide from the pump manifold.
8. Remove the upper and lower packings from the pump manifold.
9. Clean the pump manifold and install the new upper and lower packings. Refer to the illustration below for proper packing orientation.

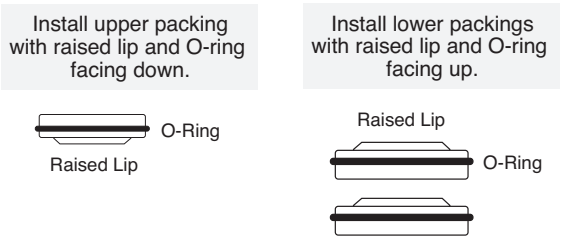

10. Inspect the piston rod for wear and replace if necessary.
11. Insert the piston guide into the retainer nut. Thread the retainer nut into the pump manifold until it is hand tight.
12. Slide the piston guide tool (included in the repacking kit) over the top of the piston rod and insert the piston rod through the bottom of the pump manifold. Using a rubber mallet, tap the bottom of the piston rod lightly until the piston rod is in position in the pump manifold.

NOTE: Coat the piston guide tool and the piston rod with grease before inserting them into the pump manifold.

13. Using a wrench, tighten the retainer nut securely.
14. Position the pump block underneath the pump housing and push up until it rests against the pump housing. When the connecting pin hole on the piston rod lines up with the hole in the slider assembly, insert the connecting pin.
15. Slide the retaining ring down over the connecting pin.

IMPORTANT: Make sure the transducer is aligned properly with the hole in the pump manifold during reassembly. Improper alignment may cause damage to the transducer gasket.

16. Thread the pump manifold mounting screws through the pump manifold and into the gear box housing. Tighten securely.
17. Reassemble the inlet valve assembly into the pump manifold.
18. For Upright Cart units, thread the siphon tube into the inlet valve and tighten securely. Make sure to wrap the threads on the down tube with Teflon tape before assembly. Replace the return hose into the hose clip on the siphon tube.
19. For Low Boy cart units, insert the elbow on the suction set assembly into the bottom of the inlet valve housing. Push the retaining ring up into the groove inside the inlet valve housing to secure the suction set assembly in position. Push the return hose onto the return hose fitting on the pump manifold and secure in position with the return hose clamp.
20. Place the front cover on the gear box housing and secure in position using the four front cover screws.
21. Turn on the sprayer by following the procedure in the "Operation" section of this manual and check for leaks.

NOTE: Repacking kit P/N 0551533 is available. For best results use all parts supplied in this kit.

© SprayTECH. All rights reserved.

Troubleshooting

Problem	Cause	Solution
A. The unit will not run.	1. The unit is not plugged in.	1. Plug the unit in.
	2. Tripped breaker.	2. Reset the breaker.
	3. The pressure is set too low (pressure control knob set at minimum setting does not supply power to unit).	3. Turn the pressure control knob clockwise to supply power to the unit and increase the pressure setting.
	4. Faulty or loose wiring.	4. Inspect or take to a SprayTECH authorized service center.
	5. Excessive motor temperature.	5. Allow motor to cool.
B. The unit will not prime.	1. The PRIME/SPRAY valve is in the SPRAY position.	1. Rotate the PRIME/SPRAY valve clockwise to the PRIME position.
	2. Air leak in the siphon tube/suction set.	2. Check the siphon tube/suction set connection and tighten or re-tape the connection with Teflon tape.
	3. The pump filter and/or inlet screen is clogged.	3. Remove the pump filter element and clean. Remove the inlet screen and clean.
	4. The siphon tube/suction set is clogged.	4. Remove the siphon tube/suction set and clean.
C. The unit will not build or maintain pressure.	1. The spray tip is worn.	1. Replace the spray tip following the instructions that came with the spray gun.
	2. The spray tip is too large.	2. Replace the spray tip with a tip that has a smaller orifice following the instructions that came with the spray gun.
	3. The pressure control knob is not set properly.	3. Turn the pressure control knob clockwise to increase the pressure setting.
	4. The pump filter, gun filter, or inlet screen is clogged.	4. Remove the pump filter element and clean. Remove the gun filter and clean. Remove the inlet screen and clean.
	5. Material flows from the return hose when the PRIME/SPRAY valve is in the SPRAY position.	5. Clean or replace the PRIME/SPRAY valve.
	6. Air leak in the siphon tube/suction set.	6. Check the siphon tube/suction set connection and tighten or re-tape the connection with Teflon tape.
	7. There is external fluid leak.	7. Check for external leaks at all connections. Tighten connections, if necessary.
	8. There is an internal fluid section leak (packings are worn and/or dirty, valve balls are worn).	8. Clean the valves and service the fluid section following the “Servicing the Fluid Section” procedure in the Maintenance section of this manual.
	9. Worn valve seats	9. Reverse or replace the valve seats following the “Servicing the Fluid Section” procedure in the Maintenance section of this manual.
	10. Motor powers but fails to rotate	10. Take unit to a SprayTECH authorized service center.
D. Fluid leakage at the upper end of the fluid section.	1. The upper packings are worn.	1. Repack the pump following the “Servicing the Fluid Section” procedure in the Maintenance section of this manual.
	2. The piston rod is worn.	2. Replace the piston rod following the “Servicing the Fluid Section” procedure in the Maintenance section of this manual.
E. Excessive surge at the spray gun.	1. Wrong type of airless spray hose.	1. Replace hose with a minimum of 50’ of 1/4” grounded textile braid airless paint spray hose.
	2. The spray tip worn or too large.	2. Replace the spray tip following the instructions that came with the spray gun.
	3. Excessive pressure.	3. Rotate the pressure control knob counterclockwise to decrease spray pressure.
F. Poor spray pattern.	1. The spray tip is too large for the material being used.	1. Replace the spray tip with a new or smaller spray tip following the instructions that came with the spray gun.
	2. Incorrect pressure setting.	2. Rotate the pressure control knob to adjust the pressure for a proper spray pattern.
	3. Insufficient fluid delivery.	3. Clean all screens and filters.
	4. The material being sprayed is too viscous.	4. Add solvent to the material according to the manufacturer’s recommendations.
G. The unit lacks power.	1. The pressure adjustment is too low.	1. Rotate the pressure control knob clockwise to increase the pressure setting.
	2. Improper voltage supply.	2. Reconnect the input voltage for 120V AC.

© Titan Tool Inc. All rights reserved.

Notes

© Titan Tool Inc. All rights reserved.

Consignes de sécurite important • Lire toutes ces consignes avant d'utiliser l'appareil. GARDER CES CONSIGNES.

Indique une situation à risque, laquelle, si elle n'est pas évitée, peut entraîner des blessures graves, voire la mort.

Pour réduire les risques d'incendie ou d'explosion, de choc électrique et de blessure, vous devez lire et comprendre les directives figurant dans ce manuel. Familiarisez-vous avec les commandes et l'utilisation adéquate de l'équipement.

DANGER : INJECTION CUTANÉE

A high pressure paint stream produced by this Le jet de haute pression produit par cet appareil peut transpercer la peau et les tissus sous-jacents, causant des blessures graves pouvant entraîner l'amputation.

NE PAS TRAITER ce type de BLESSURE COMME UNE SIMPLE COUPURE! Une amputation peut en résulter. ON doit consulter un médicin sur-le-champ.

La pression maximale de ce pulvérisateur est d'environ 3 100 PSI / 21,4 MPa.

MESURES PRÉVENTIVES :

- Ne pas pointer le pistolet vers une partie du corps.
- Ne pas pointer le pistolet vers une personne ou un animal; ne pas pulvériser non plus de produit dessus.
- NE JAMAIS mettre une partie du corps devant le jet de produit. NE JAMAIS toucher les fuites du flexible de pulvérisation.
- NE JAMAIS mettre la main, même gantée, devant le pistolet (les gants n'offrent aucune protection contre les blessures par injection).
- TOUJOURS verrouiller la détente, arrêter la pompe et relâcher toute la pression avant d'effectuer la maintenance de l'appareil ou de le laisser sans surveillance, d'en nettoyer le protège-embout ou l'embout, ou de remplacer ce dernier. La pression ne sera pas relâchée par le simple arrêt du moteur; pour ce faire, on doit se servir du bouton PRIME/SPRAY (se reporter à la section Comment libérer la pression, du présent manuel).
- TOUJOURS s'assurer que le protège-embout est en place avant de pulvériser. Il est cependant à noter que, s'il assure une certaine protection, ce dispositif joue surtout un rôle préventif.
- TOUJOURS retirer l'embout avant de vidanger ou de nettoyer l'appareil.
- toujours inspecter le flexible avant de commencer; celui-ci peut présenter des fuites attribuables à l'usure, à une flexion excessibe ou à un traitement abusif, lesquelles fuites présentent des risques d'injection cutanée. Ne pas utiliser le flexible pour soulever ou tirer l'équipement.
- NE JAMAIS utiliser de pistolet sans verrou de détente et protège-doigts.
- Tous les accessoires (pistolets, embouts, rallonges, flexibles etc.) doivent pouvoir subir une pression nominale de 3 100 PSI / 21,4 MPa ou plus.
- Ne laissez pas l'appareil sous tension ou sous pression quand vous vous en éloignez. Quand vous n'utilisez pas l'appareil, éteignez-le et libérez la pression conformément aux instructions Comment libérer la pression, du présent manuel.
- Vérifiez que toutes les connexions sont bien serrées avant d'utiliser l'appareil. Toute pièce qui n'est pas fixée solidement risque d'être projetée violemment ou d'entraîner la fuite d'un jet de liquide à une pression extrêmement élevée, ce qui pourrait causer des blessures graves.
- Verrouillez toujours la détente quand vous ne pulvérisez pas. Vérifiez que le verrou de la détente fonctionne correctement.

REMARQUE À L'INTENTION DES MÉDECINS :

Les injections cutanées sont des lésions traumatiques; il importe donc de les traiter sans délai. On NE DOIT PAS retarder ce traitement sous prétexte de vérifier la toxicité du produit en cause, celle-ci n'étant conséquente que dans le cas d'injection directe de certains produits dans le système sanguin. Il pourrait s'avérer nécessaire de consulter un plasticien ou un spécialiste en chirurgie reconstructive de la main.

DANGER : ÉMANATIONS DANGEREUSES

Certains produits (peintures, solvants, insecticides ou autres) peuvent être nocifs s'ils sont inhalés ou entrent en contact avec l'organisme. Les émanations de ces produits peuvent provoquer de graves nausées, évanouissements ou empoisonnements.

MESURES PRÉVENTIVES :

- Se servir d'un masque ou d'un respirateur s'il y a risque d'inhalation (lire toutes les directives concernant ces dispositifs afin de s'assurer qu'ils offrent la protection requise).
- Porter des lunettes de protection.
- Porter les vêtements de protection prescrits par le fabricant du produit utilisé.

DANGER : EXPLOSION OU INCENDIE

Les émanations de certains produits peuvent exploser ou s'enflammer, et risquent d'entraîner des dommages matériels ou de graves blessures.

MESURES PRÉVENTIVES :

- S'assurer que l'aire de travail est dotée de moyens d'évacuation d'air vicié et d'introduction d'air frais pour éviter l'accumulation de vapeurs inflammables. Les vapeurs dégagées par la peinture ou les solvants peuvent provoquer une explosion ou s'enflammer.
- Ne pas pulvériser de produit dans un endroit clos.
- Ne pas travailler près de sources d'ignition (décharges électrostatiques ou étincelles provoquées par le branchement/débranchement d'appareils ou la commutation d'interrupteurs, d'appareils électriques, flammes nues, veilleuses, objets chauds, etc.). La peinture ou le solvant s'écoulant dans l'équipement peut générer de l'électricité statique.
- Ne pas fumer dans l'aire de travail.
- L'aire de travail doit être munie d'un extincteur en bon état de marche.
- Prévoir un espace d'au moins 7.62 mètres entre la pompe et l'objet à pulvériser s'ils sont dans la même pièce bien ventilée (rallonger le flexible au besoin). Les vapeurs inflammables étant souvent plus lourdes que l'air, l'espace au-dessus du plancher doit être particulièrement bien aéré. La pompe contient des pièces qui produisent des arcs et émettent des étincelles pouvant enflammer les vapeurs.
- Les appareils et objets à l'intérieur ou à proximité de l'aire de travail doivent être adéquatement mis à la terre pour éviter les décharges électrostatiques.
- Veillez à ce que la zone soit propre et exempte de contenants de peinture ou de solvant, chiffons ou autres matériaux inflammables.
- Les flexibles dont on se sert doivent être conçus pour subir les pressions élevées et faits de matériaux conducteurs ou mis à la terre adéquatement; le pistolet sera mis à la terre par le biais de ses raccords aux flexibles.
- Pour les appareils électriques — Le cordon d'alimentation doit être branché à un circuit trifilaire.
- L'appareil doit toujours être vidangé à basse pression, embout retiré, dans un contenant métallique distinct. Tenir le pistolet contre la paroi du contenant de manière à mettre ce dernier à la terre et à prévenir les décharges électrostatiques.
- Toujours respecter les mises en garde et les directives du fabricant des produits et solvants utilisés. On doit connaître les produits contenus dans les peintures et solvants qu'on pulvérise. Lire les fiches techniques santé-sécurité (FTSS) et les étiquettes des contenants fournies avec les peintures et solvants. Suivres les consignes de sécurité du fabricant de peinture et de solvant.
- S'entourer de toutes les précautions possibles lorsqu'on utilise des produits ayant un point d'éclair inférieur à 21°C (70°F). Le point d'éclair est la température à laquelle le liquide peut créer suffisamment de vapeurs et s'enflammer.
- Le plastique est générateur de décharges électrostatiques; ne jamais en suspendre pour fermer une aire de travail ou en utiliser en guise de toile de protection lorsqu'on pulvérise un produit inflammable.
- Se servir de la pression la plus basse possible pour vidanger l'appareil.
- Ne pas pulvériser de produit sur la pompe.

© Titan Tool Inc. Tous droits réservés.

Consignes de sécurite important • Lire toutes ces consignes avant d'utiliser l'appareil. GARDER CES CONSIGNES.

DANGER : EXPLOSION CAUSÉE PAR DES PRODUITS INCOMPATIBLES

Ce type d'explosion peut entraîner des dommages matériels ou des blessures graves.

MESURES PRÉVENTIVES :

- Ne pas utiliser de produits contenant du chlore ou du javellisant.
- Ne pas utiliser de solvants à base de halons comme l'eau de javel, les agents antimoisissure, le chlorure de méthylène et le trichloroéthane-1-1-1, lesquels ne sont pas compatibles avec l'aluminium.
- Communiquer avec le fournisseur du produit concerné pour en connaître la compatibilité avec l'aluminium.

DANGER : GÉNÉRALITÉS

D'autres dangers peuvent entraîner des dommages matériels ou des blessures graves.

MESURES PRÉVENTIVES :

- Lire toutes les directives et consignes de sécurité avant d'utiliser l'appareil.
- Observer tous les codes locaux, provinciaux, d'état et nationaux régissant la ventilation, la prévention des incendies et le fonctionnement de l'appareil.
- Aux États-Unis, le gouvernement a adopté des normes de sécurité en vertu de l'Occupational Safety and Health Act (OSHA). Le cas échéant, on doit les consulter, notamment les parties 1910 des normes générales et 1926 des normes de construction.
- N'utiliser que les pièces autorisées par le fabricant; les utilisateurs qui choisiront d'utiliser des composants dont les caractéristiques techniques et les exigences en matière de sécurité sont inférieures devront en assumer tous les risques et responsabilités.
- Tous les raccords, les tuyaux et les bouchons de remplissage doivent être fixés solidement en place avant d'utiliser la pompe de pulvérisation. Toute pièce qui n'est pas fixée solidement risque d'être projetée violemment ou d'entraîner la fuite d'un jet de liquide à une pression extrêmement élevée, ce qui pourrait causer des blessures graves.
- Avant chaque utilisation, examiner tous les flexibles afin de confirmer l'absence de coupures, de fuites, d'abrasions ou de renflements. Vérifier également l'intégrité des raccords. Remplacer sans délai les pièces qui semblent présenter des défectuosités. Ne jamais tenter de réparer un flexible; remplacer ceux qui font défaut par des modèles haute pression, avec mise à la terre.
- Ne faites pas de nouer avec le tuyau et ne le tordez pas trop. Le tuyau à vide peut présenter des fuites suite à l'usure, les nouer ou les mauvais traitements. Une fuite risque d'injecter du produit dans la peau.
- N'exposez pas le tuyau à des températures ou des pressions supérieures à celles spécifiées par le fabricant.
- Ne pas pulvériser à l'extérieur par grands vents.
- Porter des vêtements aptes à protéger la peau et les cheveux du produit utilisé.
- Ne pas utiliser le pistolet ou ne pas pulvériser de produits en présence d'enfants à proximité. Éloigner les enfants de l'équipement en tout temps.
- Ne pas s'étirer ni ne travailler sur un support instable. Toujours garder les deux pieds au sol pour rester en équilibre.
- Se servir de la pression la plus basse possible pour vidanger l'appareil.
- Rester vigilant et faire attention à ce que l'on fait.
- Ne pas se servir de l'équipement en cas de fatigue ou si vos aptitudes sont affaiblies par la consommation de drogues ou de boissons alcoolisées.
- Pour les appareils électriques — Débranchez toujours le cordon électrique de la prise avant de travailler sur l'équipement.
- N'utilisez pas le tuyau pour tirer ou soulever l'équipement.
- Ne pas soulever par la poignée de chariot en chargeant ou en déchargeant.

Instructions de mise à la terre

Cet appareil doit être mis à la terre. La mise à la terre réduit les risques d'électrocution lors d'un court-circuit en permettant au courant de s'écouler par le fil de mise à la terre. Cet appareil est muni d'un cordon électrique avec fil de mise à la terre ainsi que d'une fiche de terre. La fiche doit être branchée sur une prise installée correctement et mise à la terre conformément à la réglementation et aux codes en vigueur.

MISE EN GARDE - Le fait de ne pas brancher correctement la fiche trifilaire de l'appareil peut entraîner des risques de choc électrique.

Si on doit réparer ou remplacer le cordon ou la fiche, ne pas raccorder le fil de terre à la borne des broches plates (lames) de cette dernière. Ce fil, normalement vert (avec ou sans rayures jaunes), doit être relié à la broche de terre.

Consulter un technicien ou un électricien qualifié à défaut de comprendre l'ensemble des présentes directives ou en cas d'incertitude quant à la mise à terre de l'appareil. Ne pas modifier la fiche de l'appareil; si elle ne s'adapte pas dans la prise voulue, faire remplacer cette dernière par un électricien qualifié.

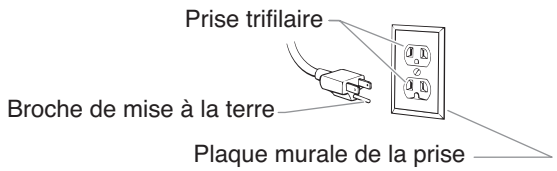

IMPORTANT : Utiliser uniquement une rallonge à trois fils munie d'une fiche de terre dans une prise secteur mise à la terre correspondant au type de fiche de l'appareil. S'assurer que votre rallonge est en bon état. Lorsque vous utilisez une rallonge, assurez-vous qu'elle soit d'un calibre suffisant pour supporter l'intensité du courant requise par l'appareil. Une rallonge trop mince entraîne une chute de tension, une diminution de l'intensité et une surchauffe. Une rallonge de calibre 12 est recommandée. Si vous devez utiliser une rallonge à l'extérieur, celle-ci doit comprendre la marque W-A après la désignation indiquant le type de cordon. Par exemple, la désignation SJTW-A indique que le cordon est conçu pour être utilisé à l'extérieur.

© Titan Tool Inc. Tous droits réservés.

Información de seguridad importante • Lea toda la información de seguridad antes de operar el equipo. GUARDE ESTAS INSTRUCCIONES.

Indica una situación peligrosa que, de no evitarse, puede causar la muerte o lesiones graves.

Para reducir los riesgos de incendios, explosiones, descargas eléctricas o lesiones a las personas, lea y entienda todas las instrucciones incluidas en este manual. Familiarícese con los controles y el uso adecuado del equipo.

PELIGRO: LESIÓN POR INYECCIÓN

El flujo de pintura a alta presión que produce este equipo puede perforar la piel y los tejidos subyacentes, ocasionando lesiones graves y posible amputación. CONSULTE A UN MÉDICO INMEDIATAMENTE.

¡NO TRATE LA LESIÓN POR INYECCIÓN COMO UNA CORTADURA SIMPLE! La inyección puede ocasionar amputación. Consulte a un médico inmediatamente.

La gama operativa máxima de la pistola es de 3100 PSI / 21.4 MPa de presión del líquido.

PREVENCIÓN:

- NUNCA apunte la pistola a ninguna parte del cuerpo.
- No apunte con la pistola ni rocíe a cualquier persona o animal.
- NUNCA deje que ninguna parte del cuerpo toque el flujo de líquido. NO deje que el cuerpo toque una fuga de la manguera de líquido.
- NUNCA ponga la mano frente a la pistola. Los guantes no protegen contra una lesión por inyección.
- SIEMPRE ponga el seguro del gatillo, apague la bomba y libere toda la presión antes de dar servicio, limpiar la boquilla o protección, cambiar la boquilla o dejar la pistola sin supervisión. No se libera la presión al apagar el motor. Debe girarse la perilla PRIME/ SPRAY (CEBAR/ROCIAR) a PRIME (CEBAR) para aliviar la presión. Consulte el PROCEDIMIENTO PARA ALIVIAR LA PRESIÓN descrito en este manual.
- SIEMPRE mantenga la protección de la boquilla en su sitio al rociar. La protección de la boquilla sirve principalmente de dispositivo de advertencia.
- SIEMPRE retire la boquilla rociadora antes de enjuagar o limpiar el sistema.
- La manguera de pintura puede presentar fugas por desgaste, dobleces y maltrato. La fuga puede inyectar material traspasando la piel. Inspeccione la manguera antes de cada uso. No use mangueras para levantar o tirar del equipo.
- NUNCA use una pistola rociadora sin contar con el seguro y la protección del gatillo.
- Todos los accesorios deben tener capacidades nominales de 3100 PSI / 21.4 MPa como mínimo. Esto incluye las boquillas rociadoras, pistolas, extensiones y manguera.
- No deje el aparato con corriente ni con presión cuando nadie esté pendiente de ella. Cuando no utilice el aparato, apáguelo y libere la presión siguiendo las instrucciones del PROCEDIMIENTO PARA ALIVIAR LA PRESIÓN descrito en este manual.
- Antes de utilizar el aparato, verifique que todas las conexiones son seguras. Las partes no aseguradas pueden ser expulsadas con gran fuerza o filtrar fluido a alta presión y provocar lesiones severas.
- Ponga siempre el seguro del gatillo cuando no esté pulverizando. Verifique que el seguro del gatillo funciona correctamente.

NOTA PARA EL MÉDICO:

La inyección a través de la piel es una lesión traumática. Es importante tratar la lesión tan pronto sea posible. NO retrase el tratamiento para investigar la toxicidad. La toxicidad es un factor a considerar con ciertos revestimientos inyectados directamente en la corriente sanguínea. Puede ser aconsejable consultar con un cirujano plástico o un cirujano especialista en reconstrucción de las manos.

PELIGRO: VAPORES PELIGROSOS

Las pinturas, solventes, insecticidas y demás materiales pueden ser nocivos si se inhalan o toman contacto con el cuerpo. Los vapores pueden causar náuseas graves, desmayos o envenamiento.

PREVENCIÓN:

- Use un respirador o mascarilla si pueden inhalarse los vapores. Lea todas las instrucciones suministradas con la mascarilla para revisar que brinde la protección necesaria.
- Use lentes protectores.
- Use ropa protectora según lo indique el fabricante del revestimiento.

PELIGRO: EXPLOSIÓN O INCENDIO

Los vapores de solventes y pinturas pueden explotar o inflamarse. Pueden producirse daños materiales, lesiones graves o ambos.

PREVENCIÓN:

- Cuente con escape y entrada de aire fresco para mantener el aire dentro de la zona de aplicación sin acumulaciones de vapores inflamables. Los gases producidos por solventes o pinturas pueden causar explosiones o incendios.
- No rocíe en lugares cerrados.
- Evite todas las fuentes de ignición como las chispas de electricidad estática, las llamas expuestas, appliances electricidad, las luces piloto y los objetos calientes. La conexión o desconexión de cables eléctricos o interruptores de luz operativos puede producir chispas. Si la pintura o el solvente fluyen por el equipo se puede generar electricidad estática.
- No fume en el área de aplicación.
- Debe haber un extintor de incendios en buen estado.
- Coloque la bomba de pintura a un mínimo de 7.62 meters (25 pies) del objeto a pintar dentro de un área bien ventilada (añada más manguera si es necesario). Los vapores inflamables son generalmente más pesados que el aire. El área debe estar sumamente bien ventilada.
- El equipo y los objetos dentro y alrededor del área a pintar deben estar debidamente conectados a tierra para evitar las chispas de estática.
- Mantenga el área limpia y libre de contenedores de pintura o solvente, trapos y otros materiales inflamables.
- Use solamente una manguera conductora o conectada a tierra para líquidos a alta presión. La pistola debe conectarse a tierra a través de las conexiones de la manguera.
- Para las aparatos eléctricas — Debe conectarse el cable eléctrico a un circuito a tierra.
- Siempre enjuague la unidad dentro de un recipiente metálico separado, con la bomba a baja presión y habiendo sacado la boquilla rociadora. Sostenga la pistola firmemente contra el costado del recipiente para conectar a tierra el mismo y evitar chispas de estática.
- Siga las advertencias e instrucciones del fabricante del material y del solvente. Conozca los contenidos de las pinturas y los solventes con los que rocía. Lea todas las Hojas de Datos sobre Seguridad de Materiales (MSDS) y las etiquetas del contenedor provistas con las pinturas y los solventes. Siga las instrucciones de seguridad del fabricante de pinturas o solventes.
- Tenga muchísmo cuidado al usar materiales cuyo punto de ignición sea inferior a 70°F (21°C). El punto de inflamación es la temperatura a la que un fluido puede producir vapores suficientes para encenderse.
- El plástico puede causar chispas de estática. Nunca cuelgue plásticos para cerrar una zona a pintar. No use mantas plásticas al aplicar materiales inflamables.
- Use la presión más baja posible para enjuagar el equipo.
- No rocíe el ensamblaje de la bomba.

© Titan Tool Inc. Todos los derechos reservados.

Información de seguridad importante • Lea toda la información de seguridad antes de operar el equipo. GUARDE ESTAS INSTRUCCIONES.

PELIGRO: POSIBLE EXPLOSIÓN DEBIDO A MATERIALES INCOMPATIBLES

Causará daños materiales o lesiones graves.

PREVENCIÓN:

- No use materiales que contengan blanqueador o cloro.
- No use solventes de hidrocarburos halogenados como blanqueador, mohocida, cloruro de metileno y 1,1,1 tricloroetano. No son compatibles con el aluminio.
- Diríjase al proveedor de revestimientos para obtener los datos de compatibilidad del material con el aluminio.

PELIGRO: GENERAL

Puede causar daños materiales o lesiones graves.

PREVENCIÓN:

- Lea todas las instrucciones y las precauciones de seguridad antes de operar el equipo.
- Siga todos los códigos locales, estatales y nacionales correspondientes que rijan la ventilación, prevención de incendios y operación.
- Se han adoptado las normas de seguridad del Gobierno de los Estados Unidos según la Ley de seguridad ocupacional y salud (Occupational Safety and Health Act, OSHA). Deben consultarse estas normas, particularmente el apartado 1910 de las Normas generales y el apartado 1926 de las Normas de construcción.
- Utilice solamente componentes autorizados por el fabricante. El usuario asume todo riesgo y responsabilidad al utilizar componentes que no cumplan con las especificaciones mínimas y requisitos de seguridad del fabricante de la bomba.
- Todos los acopladores, las mangueras y las tapas de los filtros deben estar asegurados antes de operar la bomba de rocío. Las partes no aseguradas pueden ser expulsadas con gran fuerza o filtrar fluido a alta presión y provocar lesiones severas.
- Antes de cada uso, revise todas las mangueras en busca de cortes, fugas, abrasión o hinchazón de la cubierta. Revise si hay daños o movimiento de los acoplamiento. Cambie inmediatamente la manguera si existe alguna de estas condiciones. Nunca repare una manguera de pintura. Cámbiela por otra manguera conectada a tierra apta para alta presión.
- No retuerza ni doble la manguera en exceso. En la manguera airless pueden aparecer fugas a causa del desgaste, de retorcimientos o de un mal uso. Una fuga puede inyectar material en la piel.
- No exponga la manguera a temperaturas o presiones que superen las especificadas por el fabricante.
- No pinte en exteriores en días con viento.
- Use ropa que mantenga la pintura alejada de la piel y el cabello.
- No lo opere ni rocíe cerca de los niños. Mantenga a los niños alejados del equipo en todo momento.
- No se asome ni se pare sobre soportes inestables. Mantenga siempre la posición firme y el equilibrio efectivos.
- Use la presión más baja posible para enjuagar el equipo.
- Manténgase alerta y mire lo que hace.
- No utilice la unidad cuando se encuentre cansado o bajo la influencia de las drogas o el alcohol.
- Para las aparatos eléctricas — Desenchufe siempre el cable antes de trabajar en el equipo.
- No utilice la manguera como elemento de fuerza para tirar del equipo o levantarlo.
- No levantar por la manija del carro al cargar o descargando.

Instrucciones para conectar a tierra

Este producto se debe conectar a tierra. En caso de que ocurra un corto circuito, la conexión a tierra reduce el riesgo de choque eléctrico al proporcionar un alambre de escape para la corriente eléctrica. Este producto está equipado con un cable que tiene un alambre de conexión a tierra con un enchufe de conexión a tierra apropiado. El enchufe se debe enchufar en una toma de corriente que se haya instalado y conectado a tierra debidamente, de acuerdo con todos los códigos y estatutos locales.

ADVERTENCIA - La instalación incorrecta del enchufe a tierra puede ocasionar un riesgo de choque eléctrico.

Si es necesario reparar o cambiar el cable o el enchufe, no conecte el cable verde a tierra a ninguno de las terminales de espiga plana. El cable con aislamiento de color verde por fuera con o sin rayas amarillas es el alambre a tierra y debe conectarse a la espiga a tierra.

Consulte a un electricista o técnico de servicio capacitado si las instrucciones para la conexión a tierra no se entienden claramente o si tiene dudas en cuanto a que el producto esté debidamente conectado a tierra. No modifique el enchufe que se incluye. Si el enchufe no encaja en el receptáculo, pida a un electricistas capacitado que instale un receptáculo adecuado.

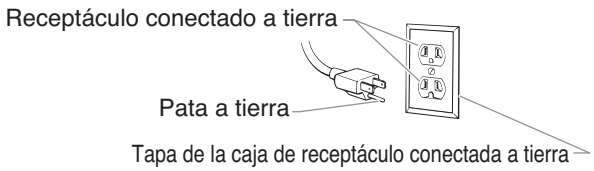

IMPORTANTE: Use solamente extensiones trifilares que tengan un enchufe de conexión a tierra de 3 hojas y un receptáculo de triple ranura que acepte el enchufe del producto. Asegúrese de que su extensión esté en buenas condiciones. Cuando use una extensión, asegúrese de usar una que sea lo suficientemente resistente como para soportar la corriente que descargue su producto. Un cable de un tamaño menor causará una caída de voltage en la línea que dará como resultado una pérdida de energía y un sobrecalentalôento. Se recomienda usar un cable de calibre 12. Si se utiliza un cable de extensión en el exterior, tiene que estar marcado con el sufijo W-A después de la designación del tipo de cable. Por ejemplo, SJTW-A para indicar que el cable es apropiado para uso en exteriores.

© Titan Tool Inc. Todos los derechos reservados.

Parts List

Main Assembly

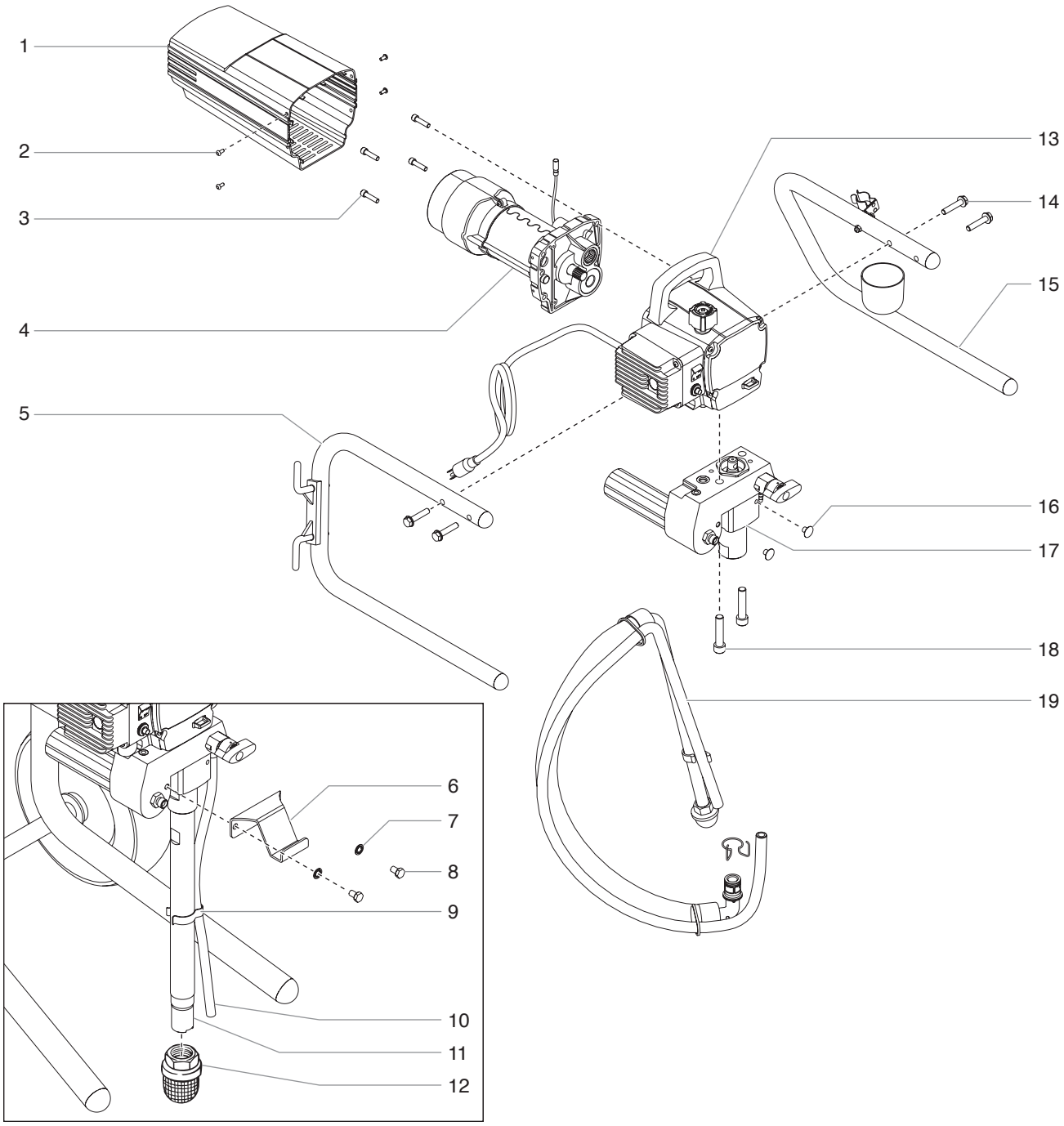

Item	Part #	Description	Quantity
1	0551517	Motor cover	1
2	0551440	Screw	4
3	9800308	Screw	4
4	----------	Motor assembly	1
5	0551526	Left leg assembly (stand only)	1
6	0551443	Pail hook (upright cart only)	
7	0508549	Washer (upright cart only)	2
8	0508550	Screw (upright cart only)	2
9	0507783	Hose clip (upright cart only)	1
10	0551556	Return hose (upright cart only)	1
11	0508552	Siphon tube (upright cart only)	1
12	5006536	Inlet screen (upright cart only)	1
13	----------	Gear box assembly	1

Item	Part #	Description	Quantity
14	0509550	Screw (stand)	4
	0509244	Screw (upright cart)	
	0508590	Screw (low boy)	
15	0551524	Right leg assembly (stand only)	1
16	0509636	Plug	2
17	0551603	Fluid section assembly (stand and low boy cart)	1
	0551602	Fluid section assembly (upright cart)	
18	0508553	Screw	2
19	0551104	Suction set assembly (stand and low boy cart)	1
20	9890212	Return hose clamp (not shown)	1

© SprayTECH. All rights reserved.

Motor Assembly

NOTE: All electrical work should be performed by an SprayTECH authorized service center.

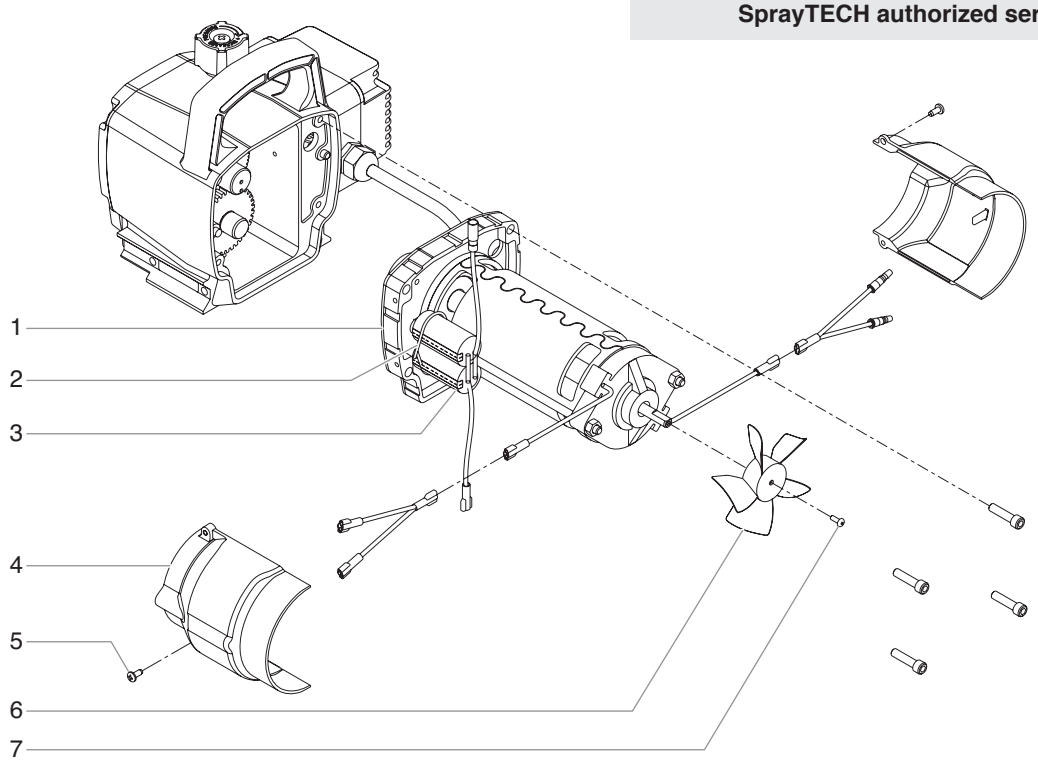

Item	Part #	Description	Quantity
1	0551215	Motor assembly (includes items 2–7)	1
2	0551543	Tie wrap	2
3	0551514	Capacitor	1
4	0508646	Fan shroud	2
5	9802891	Screw	2
6	0508648	Fan	1
7	9804916	Fan screw	1
8	0508653	Double-sided tape (not shown)	1
	0508645	Motor Brush Kit	

Suction Set Assembly (P/N 0551104)

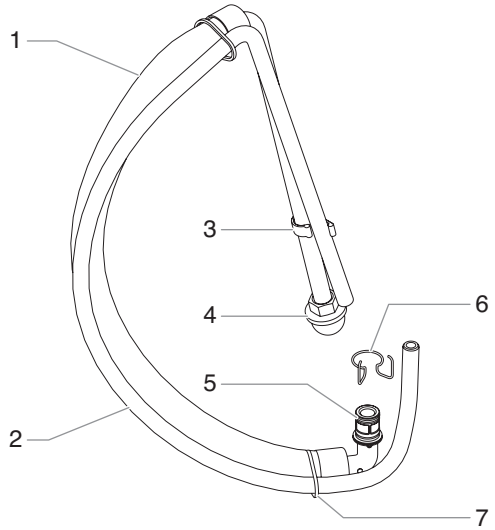

Item	Part #	Description	Quantity
1	0551437	Siphon tube assembly	1
2	0551439	Return hose	1
3	0279459	Hose clip	1
4	0295565	Inlet screen	1
5	9871105	O-ring	2
6	9822526	Retaining ring	1
7	9850638	Tie wrap	2

Labels

Part #	Description
0551445	Logo label, front
0551457	Logo label, left
0551465	Logo label, right
0551485	Warning label, explosion/injection
0295805	Shock hazard label
0508330	PRIME/SPRAY knob label
0507856	PRIME/SPRAY label

© SprayTECH. All rights reserved.

Gear Box Assembly

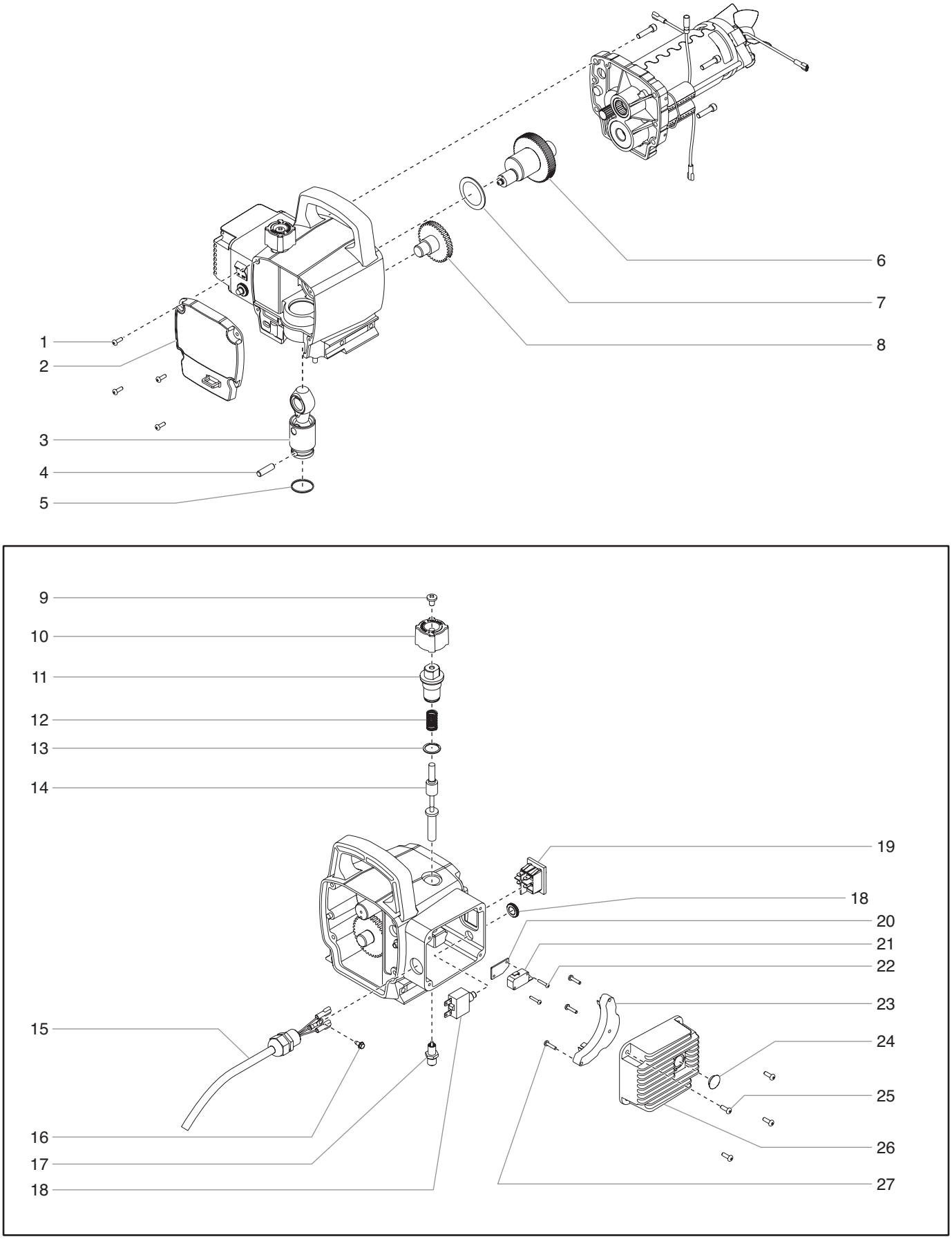

© SprayTECH. All rights reserved.

Item	Part #	Description	Quantity
1	0509218	Screw	4
2	0551518	Front cover	1
3	0551541	Slider assembly	1
4	0507777	Connecting pin	1
5	0507768	Retaining ring	1
6	0508572	Crankshaft/gear assembly	1
7	0508573	Thrust washer	1
8	0509121	Second stage gear	1
9	0509219	Screw	1
10	0551513	Pressure control knob	1
11	0551522	Knob housing	1
12	02712	Knob spring	1
13	9822522	Washer	1
14	0551521	Plunger	1
15	0551516	Power cord assembly (stand)	1
	0551432	Power cord assembly (low boy and upright cart)	

Item	Part #	Description	Quantity
16	9800340	Ground screw	1
17	0551112	Transducer assembly (includes o-ring)	1
18	0551515	Circuit breaker	1
19	9850936	ON/OFF switch	1
20	03662	Microswitch insulator	1
21	0295490	Microswitch	1
22	9800604	Screw	2
23	9852334	Relay, 120V	1
24	0507751	Port plug	1
25	0509218	Screw	4
26	0522214	Heat sink assembly (includes items 24 and 25)	1
27	0551495	Screw	3
	0551520	Mechanical control assembly (includes items 11–14)	

Stand Assembly

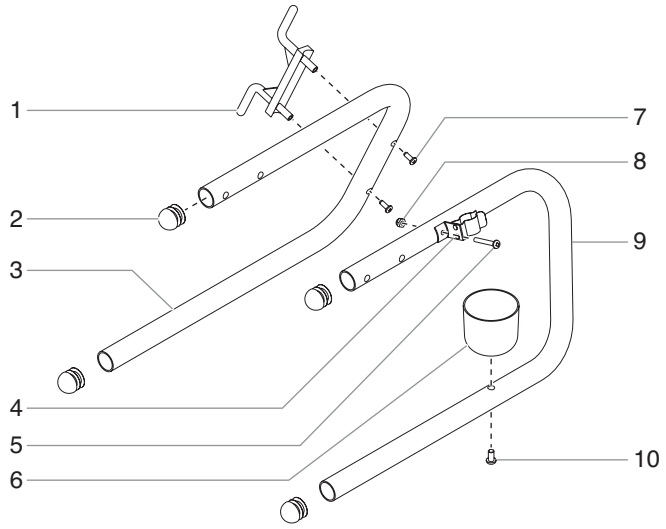

Item	Part #	Description	Quantity
1	0508377	Cord wrap	1
2	0551525	Plug	4
3	0551526	Left leg assembly (includes items 1, 2, and 7)	1
4	0551483	Clip assembly	1
5	0551484	Screw	1
6	0508381	Drip cup	1
7	0551527	Screw	2
8	0509856	Nut	1
9	0551524	Right leg assembly (includes items 2, 4, 5, 6, 8, and 10)	
10	0507955	Screw	1

Upright Cart Assembly

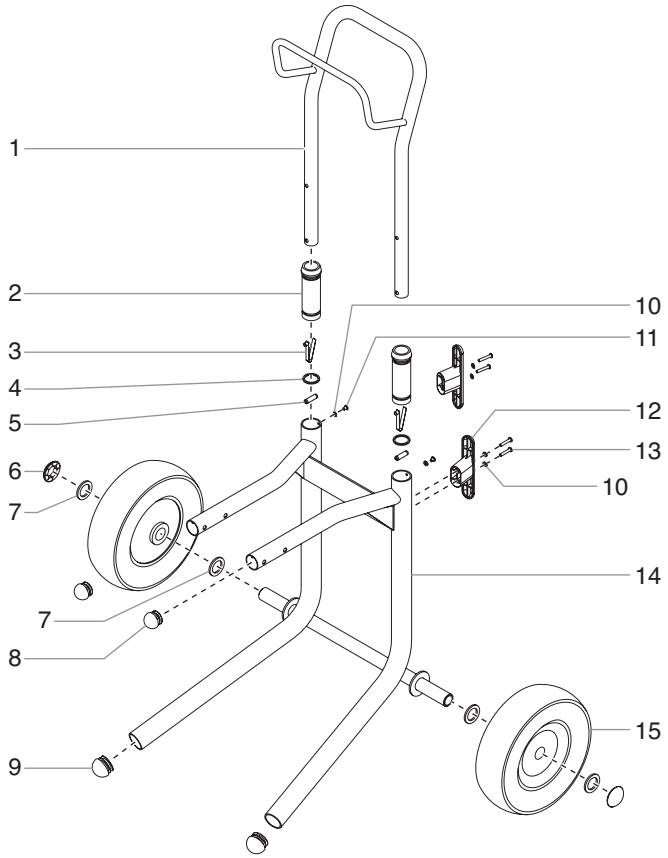

Item	Part #	Description	Quantity
1	0551664	Handle assembly (includes items 2–5, 10 and 11	1
2	0295607	Handle sleeve	2
3	9841504	Snap button	2
4	0295609	Handle washer	2
5	0295610	Roll pin	2
6	9890104	Cap	2
7	0294534	Spacer	4
8	0551550	Plug	2
9	0551548	Plug	2
10	0295606	Washer	6
11	0295608	Screw	4
12	0507655	Cord wrap	2
13	0551555	Screw	4
14	0551665	Cart weldment (includes items 8 and 9)	1
15	0278373	Wheel	2

© SprayTECH. All rights reserved.

Fluid Section Assembly
(Stand and Low Boy Cart P/N 0551603)
(Upright Cart P/N 0551602)

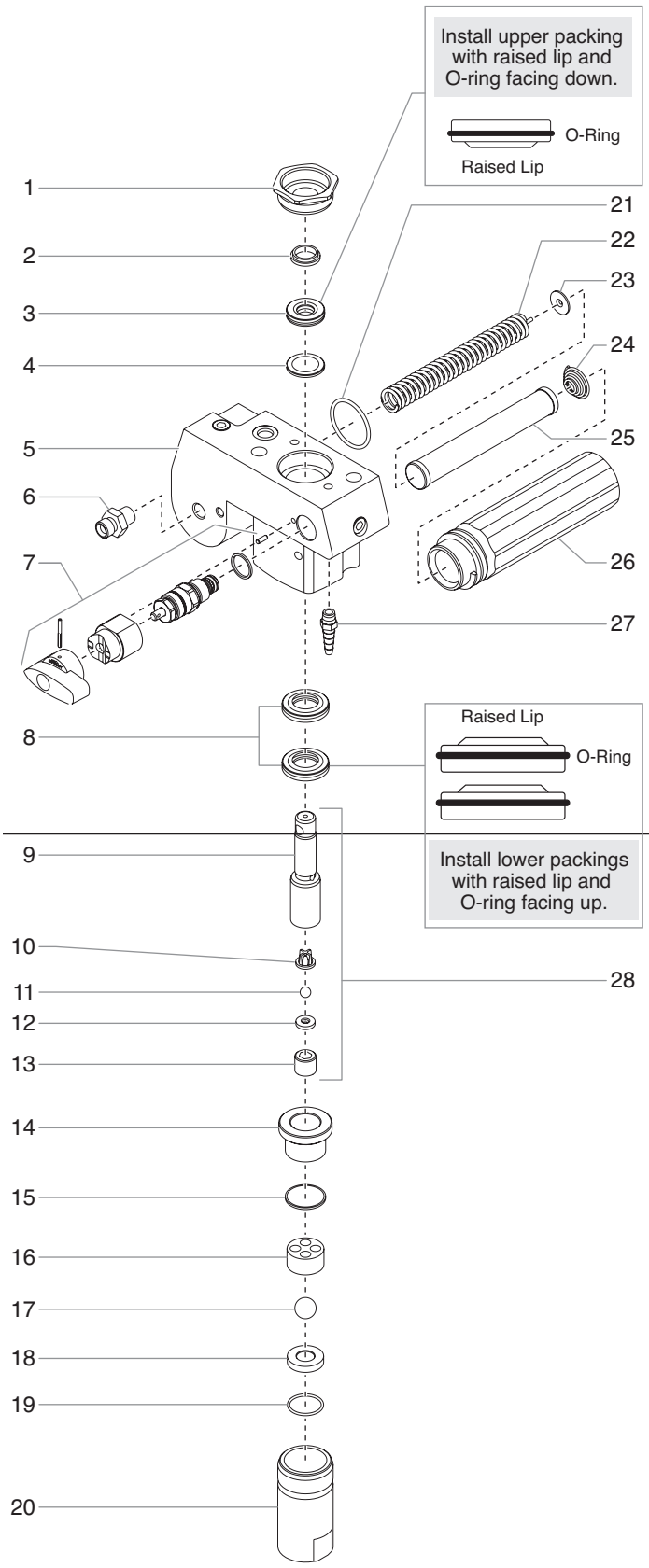

Item	Part #	Description	Quantity
1	0508664	Retainer nut	1
2	0508665	Piston guide	1
3	0551538	Upper packing assembly	1
4	0551535	Spacer	1
5	0551604	Pump manifold	1
6	0509873	Outlet fitting, 1/4”	1
7	0507690	PRIME/SPRAY valve assembly	1
8	0551539	Lower packing assembly	2
9	0551537	Piston rod	1
10	0295307	Outlet valve cage	1
11	50164	Outlet valve ball	1
12	13359	Outlet valve seat	1
13	13481	Outlet valve retainer	1
14	0508676	Piston bushing	1
15	0508739	Nylon washer	1
16	0508677	Inlet valve cage	1
17	0508678	Inlet valve ball	1
18	0551534	Inlet valve seat	1
19	0509582	O-ring, Teflon	1
20	0508680	Inlet valve housing (stand and low boy cart)	1
	0508690	Inlet valve housing (upright cart)	
21	0508604	Filter seal	1
22	0508749	Filter support spring	1
23	0508603	Adapter	1
24	0508602	Filter spring	1
25	0508748	Filter	1
26	0508601	Filter housing	1
27	0551530	Return hose fittiing, 1/8”	1
28	0551536	Piston assembly (includes items 9–13)	1
	0551605	Filter assembly (includes items 21–26)	1
	0551533	Repacking kit (includes items 2–4, 8 10–11, 15, 17, and 19)	
	0551509	Lower seal insertion too	

© SprayTECH. All rights reserved.

Low Boy Cart Assembly (P/N 0555147)

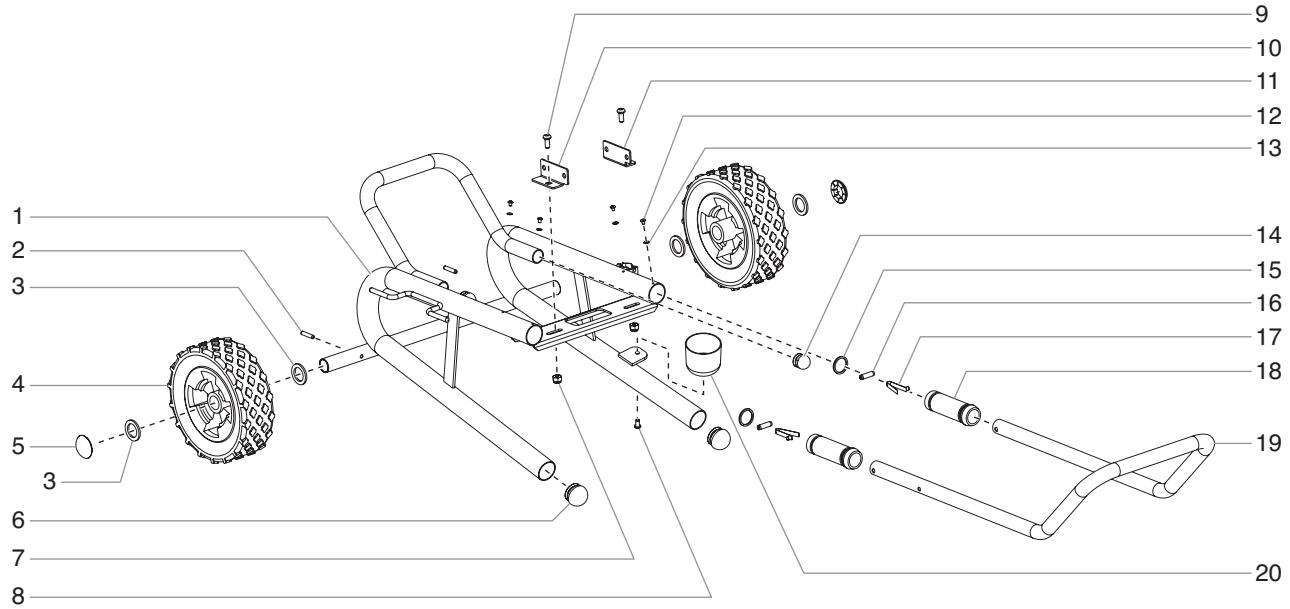

Item	Part #	Description	Quantity
1	0551608	Cart weldment (includes items 6 and 14)	1
2	0507956	Roll pin	2
3	0294534	Wheel spacer	4
4	0270394	Wheel	2
5	9890104	Cap	2
6	0551548	Plug	2
7	0295615	Lock nut	2
8	0507955	Screw	1
9	0295618	Screw	2
10	0551551	Mounting bracket, left	1
11	0551552	Mounting bracket, right	1

Item	Part #	Description	Quantity
12	0295608	Screw	4
13	0295606	Washer	4
14	0551525	Plug	2
15	0295609	Handle washer	2
16	0295610	Roll pin	2
17	9841504	Snap button	2
18	0295607	Sleeve	2
19	0551609	Handle asssembly (includes items 12, 13, and 15–18	1
20	0508381	Drip cup	1

Electrical Schematic

NOTE: All electrical work should be performed by an SprayTECH authorized service center.

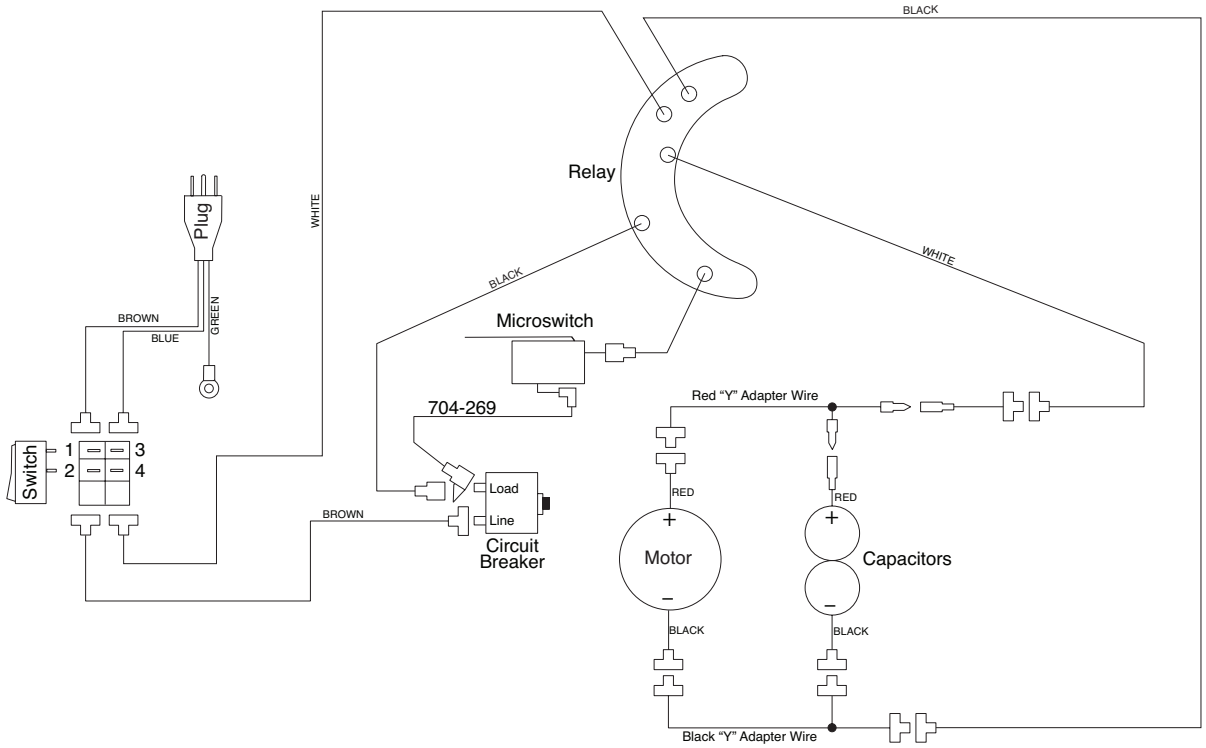

© SprayTECH. All rights reserved.

Limited Warranty

SprayTECH Corporation, (“SprayTECH”) warrants that at the time of delivery to the original purchaser for use (“End User”), the equipment covered by this warranty is free from defects in material and workmanship. With the exception of any special, limited, or extended warranty published by SprayTECH, SprayTECH’s obligation under this warranty is limited to replacing or repairing without charge those parts which, to SprayTECH’s reasonable satisfaction, are shown to be defective within twelve (12) months after sale to the End User. This warranty applies only when the unit is installed and operated in accordance with the recommendations and instructions of SprayTECH.

This warranty does not apply in the case of damage or wear caused by abrasion, corrosion or misuse, negligence, accident, faulty installation, substitution of non-SprayTECH component parts, or tampering with the unit in a manner to impair normal operation.

Defective parts are to be returned to an authorized SprayTECH sales/service outlet. All transportation charges, including return to the factory, if necessary, are to be borne and prepaid by the End User. Repaired or replaced equipment will be returned to the End User transportation prepaid.

THERE IS NO OTHER EXPRESS WARRANTY. SPRAYTECH HEREBY DISCLAIMS ANY AND ALL IMPLIED WARRANTIES INCLUDING, BUT NOT LIMITED TO, THOSE OF MERCHANTABILITY AND FITNESS FOR A PARTICULAR PURPOSE, TO THE EXTENT PERMITTED BY LAW. THE DURATION OF ANY IMPLIED WARRANTIES WHICH CANNOT BE DISCLAIMED IS LIMITED TO THE TIME PERIOD SPECIFIED IN THE EXPRESS WARRANTY. IN NO CASE SHALL SPRAYTECH LIABILITY EXCEED THE AMOUNT OF THE PURCHASE PRICE. LIABILITY FOR CONSEQUENTIAL, INCIDENTAL OR SPECIAL DAMAGES UNDER ANY AND ALL WARRANTIES IS EXCLUDED TO THE EXTENT PERMITTED BY LAW.

SPRAYTECH MAKES NO WARRANTY AND DISCLAIMS ALL IMPLIED WARRANTIES OF MERCHANTABILITY AND FITNESS FOR A PARTICULAR PURPOSE WITH RESPECT TO ACCESSORIES, EQUIPMENT, MATERIALS OR COMPONENTS SOLD BUT NOT MANUFACTURED BY SPRAYTECH. THOSE ITEMS SOLD, BUT NOT MANUFACTURED BY SPRAYTECH (SUCH AS GAS ENGINES, SWITCHES, HOSES, ETC.) ARE SUBJECT TO THE WARRANTY, IF ANY, OF THEIR MANUFACTURER. SPRAYTECH WILL PROVIDE THE PURCHASER WITH REASONABLE ASSISTANCE IN MAKING ANY CLAIM FOR BREACH OF THESE WARRANTIES.

Patents

These products are covered by one or more of the following U.S. patents:

6,031,352	5,848,566	5,769,321	5,725,364	5,671,656	5,435,697	5,228,842
5,346,037	5,252,210	5,217,238	5,192,425	4,908,538	4,768,929	4,744,571
D384,676	6,179,222	5,934,883	4,723,892			

Material Safety Data Sheets (MSDS) are available on Titan’s website or by calling Customer Service.

SprayTECH
1770 Fernbrook Lane
Minneapolis, MN 55447
Technical Assistance: 1-800-292-4637
Order Entry: 1-800-443-4500
Fax: 1-800-525-9501
www.spraytechinc.com

© SprayTECH. All rights reserved.